APODigital: A Flexible Platform for Smart Surveys

Vinicio Bernardes Silva[1], Victor Guimarães[1], Laura Barros[1], Ana Julia Maria Silva[1], Diego Molinos[1], Simone Villa[1], and Flávio de Oliveira Silva[2(✉)]

[1] Federal University of Uberlândia (UFU), Uberlândia, Brazil
{vinicio.silva,victorguimaraes,laura.moreira1,anajuliamaria,diego.molinos,simonevilla}@ufu.br
[2] University of Minho, Braga, Portugal
flavio@di.uminho.pt

Abstract. Digital data collection is shifting from web-based questionnaires to smart surveys that integrate respondent feedback with multimodal device data; existing platforms often lack the flexibility required for complex, context-aware research. Existing platforms focus on specific use cases but do not support a broad range of scenarios. This work presents APODigital, a configurable smart-survey platform that extends traditional digital questionnaires by collecting additional data, such as camera and GPS location data, and by providing user-interacting questions generated by generative AI. The system design goal was to create a platform with a high degree of flexibility for creating questionnaires, while remaining simple enough for non-technical users to design and deploy customized survey applications. In addition to conventional question types, APODigital supports advanced features such as camera-based inputs, grouped evaluations, ranking-based feedback, image classification, and generative AI-assisted workflows. The system supports the design and deployment of smart surveys for flexible use across diverse scenarios. To showcase this flexibility, we present three applications built on the same platform: two housing-related evaluations and one health survey application. We demonstrate the platform's versatility through three distinct deployments: Meu Apê, a streamlined pilot involving 75 apartments; Como Você Mora?, a deep post-occupancy evaluation study with 246 participants; and a generic health questionnaire that showcases cross-domain reuse and the types of questions it supports. Our findings suggest that APODigital provides a scalable, reusable foundation for researchers requiring richer, context-driven data without the need for custom software development.

Keywords: smart surveys · multimodal data collection · post-occupancy evaluation · progressive web applications · generative AI

© The Author(s), under exclusive license to Springer Nature Switzerland AG 2027
O. Gervasi et al. (Eds.): ICCSA 2026, LNCS 16769, pp. 362–377, 2027.
https://doi.org/10.1007/978-3-032-30494-0_23

1 Introduction

Due to technological innovation, data collection has evolved from traditional web-based forms to *smart surveys*. In this type of survey, new devices, such as smartphones, wearables, and sensors, enable multimodal data acquisition, thereby enhancing the quality of depth data associated with users' responses [5]. In this type of survey, using sensors and artificial intelligence, respondents' answers are provided with improved context from additional data, thereby increasing awareness of the environment associated with these responses [14].

Despite the new possibilities that come with this type of survey, challenges remain, such as usability and a user experience that helps and engages the respondents, the use of Machine Learning (ML) and Natural Language Processing (NLP), and flexibility by using configurable, non-rigid systems that can integrate new technologies and handle diverse participant interaction methods [3]. Moreover, the use of generative AI in this area remains a challenge [15].

Post-Occupancy Evaluation (POE) aims to gather systematic feedback from building users about their experiences in the space and is inherently user-centered and data-driven [4]. As a tool capable of enhancing data gathering from the human interaction with the environment, *smart surveys* can help to enhance feedback from building users regarding their experiences within the space comfort, usability, sustainability, and environmental quality, thus helping to move from static data collection toward a dynamic, feedback-loop approach [4].

To address these limitations, we developed APODigital, a flexible platform that transforms standard questionnaires into multimodal *smart surveys* with adaptive paths and AI-driven interactions. Using a modular architecture, the system employs a Progressive Web Application (PWA) frontend managed through an administrative portal, enabling researchers to build customizable questionnaire flows that integrate with different generative AI models, allowing researchers without programming backgrounds to build and launch their own survey apps. The system handles common question types, such as text-based, single-choice, and multiple-choice, but also supports advanced features such as camera-based inputs, use of different device sensors, ranking systems, and generative AI-supported workflows that enrich the data collection process.

The contributions of this work are around the pillars. We present a configurable smart survey platform that leverages device sensors to enable multimodal data collection in questionnaires, supports camera- and GPS-based questions, provides different navigation flows based on conditions, and supports generative AI workflows. We detailed a layered, modular architecture that provides a responsive frontend across devices, a backend that supports structured and multimedia data handling, and integration with generative AI services using reusable backend components. Finally, we validated the system's versatility by deploying it across three real-world scenarios in different domains: two based on POE studies and one general survey that showcases the system's flexibility.

The remainder of this paper is organized as follows. Section 2 reviews related work on digital survey systems and smart surveys. Section 3 presents the architecture and design of the APODigital platform. Section 4 describes the imple-

mentation and the applications developed using the platform. Finally, Sect. 5 concludes the paper and outlines directions for future work.

2 Related Work

Recent research has increasingly shifted from traditional web-based questionnaires to *smart surveys*, i.e., survey systems that integrate self-reported responses with contextual data collected via smart devices. In this paradigm, smartphones are not merely used as form-filling interfaces but also as sensing platforms that capture contextual information through embedded hardware, such as cameras, GPS receivers, motion sensors, and other connected devices.

Schouten et al. [14] define smart surveys as survey systems that integrate respondent interactions with contextual information collected from digital devices. They state that the use of Artificial Intelligence and Machine Learning (AI/ML) remains challenging. [9] says that the use of sensors and machine intelligence can reduce respondent burden and increase data quality.

TigerAware, proposed by Morrison et al. [10], is a general-purpose, customizable mobile data-collection and analytics platform that supports both traditional survey responses and sensor-based data capture. TigerAware enables the collection of information from internal smartphone sensors, external sensing devices, and structured questionnaires, and provides real-time dashboards for visualization. As a tool presented in 2018, it does not use any AI-based technology.

Image-based responses in mobile surveys have also been explored by Bosch et al. [2]. Their study investigates the feasibility of allowing respondents to answer survey questions with photographs rather than text. They explore the use of images to obtain richer response context and a computer-vision-based API to support image-response classification at scale.

Conversational survey interaction has also been explored as an alternative survey interface paradigm. Building on *TigerAware*, Guo et al. [7] propose a serverless conversational survey system that enables researchers without programming skills to create voice-enabled chatbots for conducting customizable surveys. In this case, respondents interact with questionnaires via text or voice.

Giacalone et al. [5] present smart surveys that work together with IoT deployed in the environment where the survey takes place. They present a modular system that integrates IoT devices, environmental sensors, and wearable sensors. The system uses neural network-based components in the backend, but does not use generative AI to interact with the user. These deep interactions with IoT in environments hinder the system's widespread adoption across diverse areas.

To summarize APODigital's positioning in this landscape, Table 1 compares these works with respect to support for camera input, smartphone sensing, external sensor/IoT integration, adaptive questionnaire flow, and generative AI-supported interaction with respondents.

These studies presented in Table 1 show the ongoing transition from text-based digital questionnaires to smart-survey systems that incorporate data from

Table 1. Comparison of smart survey platforms and multimodal data collection capabilities

Work	Year	Cam	GPS	Ext	Adapt	Gen-AI	Main Contribution
Morrison et al. [10]	2018	Y	Y	Y	Y	N	TigerAware modular mobile survey and sensor data collection platform
Bosch et al. [2]	2019	Y	N	N	N	N	Image-based responses in mobile surveys with automated computer vision analysis
Guo et al. [7]	2021	N	N	N	Y	N	Conversational chatbot-based survey interaction
Alkassm et al. [8]	2022	Y	N	N	Y	N	Use of virtual reality environments to enhance questionnaire immersion
Rama et al. [13]	2022	N	N	N	Y	N	Innovative structuring and customization of Google Forms questionnaires
Bensfiya et al. [1]	2023	Y	N	N	L	N	Comparative study of digital assessment tools including Google Forms and QCM CAM
Giacalone et al. [5]	2025	Y	Y	Y	N	N	IoT-enabled smart survey architecture
APODigital	**2025**	**Y**	**Y**	**Y**	**Y**	**Y**	**Configurable multimodal survey platform integrating smartphone sensing capabilities and generative-AI supported interactions**

Columns: Cam = Camera input; GPS = Smartphone sensors (e.g., GPS); Ext = External sensors/IoT; Adapt = Adaptive questionnaire flow; Gen-AI = Generative AI-based questions.
Legend: Y = Supported; N = Not supported; L = Limited support; C = Conceptual framework

multiple media to enrich the context of responses, improve respondent engagement, and leverage advances in IoT and artificial intelligence.

While some tools focus on image [2] or voice [7] to enhance traditional surveys, or are tightly coupled with infrastructure [5], most systems lack a platform that integrates these capabilities into a unified survey infrastructure supporting surveys across different knowledge domains.

Although some tools have successfully integrated image [2] or voice [7] capabilities to enhance traditional surveys, and others have focused on heavy infrastructure [5], these solutions often lack a common thread. The current landscape lacks a truly integrated platform that brings these features together into a single, versatile system capable of supporting data collection across different knowledge domains.

To address this gap, APODigital is a configurable smart-survey platform that combines reusable questionnaire composition, multimodal interaction, adaptive navigation, and generative AI-based interactions with respondents. The platform's inception was motivated by POE. Still, we designed it as a general-purpose infrastructure capable of supporting a broader range of digital data-collection scenarios created by non-technical users.

3 APODigital Platform

This section introduces the Adaptive Platform for Omnimodal Digital Surveys (APODigital).

In addition to providing high flexibility for different types of surveys, another goal of the system design was to handle diverse data types, including user-entered text, sensor data, and images. To achieve this, we used a layered design pattern to support the system architecture. Figure 1 illustrates the architecture and overall workflow of the APODigital system.

The system is compatible with various client devices, and the user experience across all devices was also a key objective. The system can leverage the sensors available on these devices and request permission from the end user, in this case, the survey participant, to use them.

Initially, the system's end users design and configure questionnaires through the administrative portal. The system uses modern web development [11] and relies on a Vue-based frontend that consumes services from a RESTful backend API.

While the end-user creates new questions, the backend processes the requests and stores each question structure and its all related configuration in a PostgreSQL database.

Once a participant selects a questionnaire to answer, they launch a PWA. The frontend uses RESTful calls to load the required survey logic on the fly, which then dictates how the application renders prompts and navigation paths for that specific session.

By using a PWA, the system runs in standard web browsers, providing cross-platform compatibility without requiring a native application. This enables

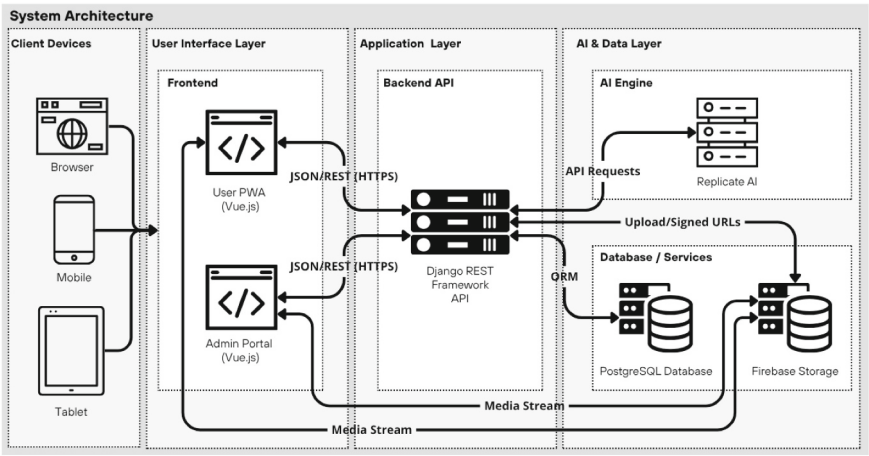

Fig. 1. APODigital Platform Architecture

participants to complete the questionnaires regardless of device type or operating system. As the participant provides responses, the data is transmitted to the backend, where it is validated and stored. Media data, such as images are uploaded directly to cloud storage services via secure mechanisms, such as signed URLs, thus reducing backend load.

The system integrates generative AI services via external APIs to support functionalities such as image generation and natural-language interaction. During participant responses, the system supports generative-AI-based interaction. This enhances the user experience and enables more advanced data-collection workflows.

The next subsections provide additional information about each system layer.

3.1 User Interface Layer

For the frontend, we chose the Vue framework, which enabled us to build a responsive interface that functions seamlessly as a PWA across desktops, smartphones, and tablets. Every questionnaire is assigned a unique URL, which the researcher defines within the administrative portal. When a respondent opens this link, the application dynamically retrieves the necessary configurations from the backend API to render the survey—a setup that provides the flexibility needed for diverse data-collection needs.

The *admin* portal serves as a no-code environment for researchers to design and manage their studies. Users can choose from a wide range of question types, including standard multiple-choice and open-ended fields, as well as more specialized tools such as grouped scales, camera-based inputs, and informational prompts. To make the surveys more interactive, we implemented client-side *go-to* logic that enables dynamic navigation, in which the question flow adapts

instantly based on a participant's previous answers. Beyond creation, the portal also supports cloning and editing, enabling existing studies to serve as templates for future campaigns and thereby significantly reducing setup time for new research.

We also integrated customizable startup screens to manage the first point of contact with participants. These screens allow researchers to clearly state the study's objectives, present privacy conditions, and obtain informed consent. This ensures that each respondent can review the participation agreement before opting in or declining.

Finally, the User PWA serves as the primary gateway for participants, designed for a smooth, intuitive experience. Recognizing that field research often happens in areas with poor service, we prioritized offline functionality. If a connection is lost, the PWA temporarily caches responses locally on the device. Once a stable network is detected, the system automatically synchronizes the data with the backend, ensuring no information is lost due to connectivity issues.

3.2 Application Layer

The Application Layer uses the Django framework, which provides the REST APIs that drive the main platform functions. It establishes the connection between the frontend, data persistence, and AI services, handling tasks such as questionnaire configuration, user session management, response validation, and the execution of core business rules. This layer is also responsible for managing database operations and integrating the platform with external services.

The services in this layer validate participant responses and securely store the data in a relational database. The backend also supports data retrieval and export. The researcher responsible for a questionnaire needs flexibility to work with the data. In this layer, the service logic exports results directly to formats such as Excel and Comma-Separated Values (CSV). This enables further statistical analysis in external tools, enhancing the system's flexibility.

This layer contains the core application logic. This approach improves future maintainability by providing a direct message flow between components and easing the addition of new functionality to the system.

3.3 AI & Data Layer – AI Engine

The AI & Data Layer is responsible for persistent storage, data processing, and the integration of AI-based services.

The *AI Engine* is a component that supports various AI capabilities, enabling the use of generative AI during questionnaire responses by providing generative AI-supported questions.

The generative-AI support currently exposed by the system is organized around two main functions. The first is image generation from textual prompts, which can be used during data collection or as part of the interaction flow presented to the user. The second is natural-language interaction with Large

Language Models (LLMs), enabling users to ask questions, seek clarification, and receive contextual assistance while using the platform.

To integrate these capabilities into the system, we used external APIs provided by the Replicate platform[1]. By doing so, we decouple the application logic from specific model implementations, simplifying the incorporation of new models as the system evolves. We also leave room for future evaluation of different AI models. The unified API sub-layer reduces the effort required to replace, update, or extend AI functionality while preserving the platform's overall organization.

Currently, image generation is supported by the Nano Banana model [6]. Natural-language assistance and image interpretation tasks are supported by the GPT-4o Mini model [12]. These services are invoked as part of the backend workflow and exposed to the application via controlled interfaces, enabling their incorporation without altering the system's higher-level structure.

In this work, the goal is to present the AI-enabled functions as integrated components of APODigital and illustrate their use through representative workflows in the generic application. Here, the main focus is on the system design and the integration of these capabilities into the platform architecture. As future work, we plan to conduct a systematic evaluation of these functionalities, including accuracy, usability, and their impact on the user experience across different AI models.

3.4 AI & Data Layer - Database and Services

The AI & Data Layer provides services for interacting with the database and storage services. The APODigital system needs to handle both structured and unstructured data.

The structured data includes questionnaire definitions, user responses, and sensor data. In our implementation, we use PostgreSQL. The media captured during the questionnaire responses constitute unstructured data that the system must handle. The design choice here was to store this type of data in a cloud-based service. By doing this, we decouple handling large files from the Application layer and improve scalability to support media-oriented workflows. In our implementation, images, geolocation, and generative-AI-signed URLs were used to access this data. This enables a more secure transfer between client devices and avoids routing large files to the backend.

The APODigital system also incorporates other mechanisms to enhance security and data governance for user interaction. These mechanisms include authenticated access, secure storage, and controlled transfer of both structured and unstructured data. This approach is important in application scenarios that simultaneously process images, geolocation, and generative AI.

4 Applications and Evaluation

To evaluate the practical applicability of APODigital, we examined its use in three questionnaire applications built on top of it. These are not three separate

[1] https://replicate.com/.

systems, but rather three different questionnaires that use a single smart-survey infrastructure. This evaluation enables us to assess how APODigital supports diverse questionnaire structures, interaction patterns, and data-collection needs.

From an evaluation standpoint, these applications highlight three complementary dimensions of the platform. They illustrate *domain-specific customization*, as shown by two POE questionnaires with different levels of complexity. They demonstrate support for *adaptive and multimodal interaction*, including conditional flows, camera-based inputs, grouped scales, ranking questions, and mobile-device features. Finally, they demonstrate cross-domain applicability and indicate that the infrastructure can support smart surveys across diverse scenarios.

This flexibility makes APODigital suitable for specialized applications in different research contexts. In this work, we use three applications to demonstrate this capability: *Meu Apê*, *Como Você Mora?*, and a *Generic Evaluation Application*. Together, they show that the platform can support both focused and more general-purpose data-collection scenarios, spanning different levels of questionnaire complexity and interaction richness.

4.1 Evaluation Perspective

The three applications were chosen to represent distinct usage profiles of the platform. *Meu Apê* focuses on streamlined interaction and quick completion. *Como Você Mora?* explores greater configurability and adaptive questionnaire behavior in a richer domain context. The *Generic Evaluation Application*, in turn, highlights cross-domain reuse and the incorporation of AI-enabled interaction features. For this reason, the evaluation presented in this section considers APODigital not as a single-purpose questionnaire tool, but as a reusable smart-survey infrastructure.

In the deployments involving real users, described in Subsect. 4.2 and Subsect. 4.3, participation was preceded by an explicit agreement screen. This ensured that users were informed about the study and could choose whether to participate before any data was collected.

Table 2 highlights how the same APODigital infrastructure supports different levels of questionnaire complexity, interaction richness, and domain adaptation without requiring changes to the underlying system architecture.

4.2 *Meu Apê*—Apartment-Focused Evaluation

The *Meu Apê* application, available at https://app-mora.facom.ufu.br/evaluation/meuape_tu, is a digital instrument for assessing the environmental quality of occupied apartment buildings. Its goal is to capture multiple dimensions of dwelling quality from physical, behavioral, and environmental perspectives, and to examine how residents' daily habits may help reduce environmental impacts.

From the perspective of platform evaluation, *Meu Apê* represents a *low-complexity deployment profile*. The questionnaire was designed to support quick

Table 2. Comparison of APODigital applications

Application	Domain	Flow	Multimodal	AI	Deployment	Evaluation focus
Meu Apê	Apartment POE	Linear	Medium	No	Pilot (75 apartments)	Low-complexity deployment; fast completion and high engagement
Como Você Mora?	Housing POE	Adaptive	Medium	No	Controlled study (246 questionnaires; 123 houses/123 apartments)	Complex branching, richer contextual data, and configurable survey logic
Generic Evaluation	Health	Mixed	High	Yes	Prototype	Cross-domain reuse and AI-enabled interaction

Columns: Flow = Questionnaire structure (Linear, Adaptive, Mixed);
Multimodal = Use of camera, grouped scales, ranking, and device-aware features;
AI = Use of AI-based features (image classification, generative workflows, LLM interaction);
Deployment = Observed usage context.

completion and encourage user engagement through a simplified structure and mostly linear navigation, with limited use of conditional logic. This configuration is particularly suitable for scenarios in which ease of use, short completion time, and higher response rates are important.

The survey is organized into eight sections: user profile, apartment characteristics, environmental comfort (thermal and lighting), energy efficiency, water efficiency, waste disposal habits, transport and carbon emissions, and new consumption habits. In addition to conventional questionnaire items, the application also leverages device-aware capabilities, such as the mobile camera and GPS, to enable more precise unit-level diagnostics.

The application was validated through an on-site pilot study involving residents of 75 apartments in the Imperial Residence condominium in Uberlândia, Brazil. This deployment provides initial evidence that APODigital can effectively support focused, real-world POE studies through a streamlined mobile data-collection process.

4.3 *Como Você Mora?*—Comprehensive Housing Evaluation

The *Como Você Mora?* application, available at https://app-mora.facom.ufu.br/evaluation/comovocemora, is a broader and more expressive tool designed to evaluate both houses and apartments. Compared with *Meu Apê*, it represents a *higher-complexity deployment profile*, requiring richer questionnaire logic and wider contextual coverage.

This application relies on more elaborate navigation structures and extensive conditional branching. As a result, the questionnaire can adapt dynamically to participants' responses and capture more detailed information, albeit at the cost of a longer completion time. From a platform perspective, this application is particularly relevant because it shows that APODigital can accommodate

adaptive questionnaire behavior and more sophisticated survey flows without requiring a different system implementation.

The survey is structured around six categories: "About You," "Previous Housing," "Current Housing," "Building and Complex," "Housing Unit," and "Sustainable Habits." In addition, the system includes nine informative screens that guide participants through the questionnaire, clarify technical issues, and provide feedback during the interaction.

The applicability of this configuration across different housing typologies was examined in a controlled study conducted in Uberlândia, Brazil, with 246 completed questionnaires, evenly divided between houses (123) and apartments (123). This study provides evidence that the same APODigital infrastructure can support more detailed evaluations, richer result structures, and distinct respondent profiles, further highlighting the platform's configurability and adaptability.

4.4 Generic Evaluation Application - Cross-Domain Reuse

Beyond housing evaluation, APODigital's modular design enables the creation of questionnaires across a wide range of research domains. To illustrate this flexibility, we developed a generic health questionnaire that demonstrates how the platform can be adapted to different research contexts while preserving the same core infrastructure. This questionnaire is available at https://app-mora.facom.ufu.br/evaluation/generic-english.

This application showcases several question types supported by the platform, including informational prompts, single-choice and multiple-choice questions, open-text responses, camera-based inputs, and grouped-scale evaluations. It also demonstrates more advanced AI-enabled features, such as image classification for automatic category identification and generative *img2img* models for interactive photo editing, both of which provide dynamic feedback based on user input.

The questionnaire includes the following interaction types:

- **Informational Question:** Introduces the questionnaire and explains the purpose of collecting data on health habits.
- **Single-Choice Question:** Allows respondents to select a single option, such as the frequency of physical activity.
- **Multiple-Choice Question:** Enables respondents to select multiple options, such as the types of food they regularly consume.
- **Text Question:** Provides an open field in which respondents can describe aspects of their physical health.
- **Camera-Based Question:** Allows respondents to submit a photograph related to an aspect of their well-being.
- **Grouped Scale Question:** Captures perceptions of different health aspects (e.g., sleep quality, diet, and exercise routine) using a scale ranging from "very good" to "very poor".
- **Generative Image:** Supports image editing through *img2img* models based on user-defined options.

- **Image Classification:** Uses artificial intelligence to identify categories from a user-provided image and provides immediate feedback based on the detected results.
- **Ranking Question:** Provides immediate *feedback* based on the responses, encouraging healthy behaviors and suggesting improvements when appropriate.

Figure 2a show examples of how a respondent sees the different types of question types that are commonly found in every questionnaire, namely informational, single-choice, multiple-choice, and text input. Figure 2b shows advanced types of questions, such as camera-based, grouped-scale, and ranking interactions, that enable real-time presentation of the score the respondent receives while answering some questions. For example, after several questions about eating habits, you can provide a score so that the respondent knows their rank in this regard.

Figure 3a presents the generative AI workflow based on *img2img* processing. This type of question uses the camera to enhance the generative AI-based interaction. Figure 3b shows the image-classification workflow with automated category identification and feedback provided to the respondent.

This application also shows that APODigital can be used beyond POE scenarios. The same infrastructure can be reused in a different domain while preserving its core architectural and interaction mechanisms, including dynamic rendering, question abstractions, multimodal support, and API-based AI integration.

In this work, the goal is to present AI-enabled features supported by APODigital and to showcase the platform's extensibility and support for richer forms of interaction. A more detailed evaluation of their quality, reliability, and impact on users remains a topic for future work.

4.5 Discussion of Findings

The three applications provide complementary evidence of APODigital's capabilities. First, the platform accommodates different levels of questionnaire complexity, ranging from mostly linear instruments designed for quick completion (*Meu Apê*, presented in Subsect. 4.2) to more elaborate surveys with extensive adaptive branching (*Como Você Mora?*, presented in Subsect. 4.3).

The system supports multimodal data collection through camera-based interaction and device-aware features, moving beyond conventional digital questionnaires toward richer smart-survey workflows.

The generic application exhibits that these capabilities can be reused in a very different context from the previous POE-based questionnaires, supporting APODigital's view of itself as a configurable smart-survey platform rather than a single-domain solution.

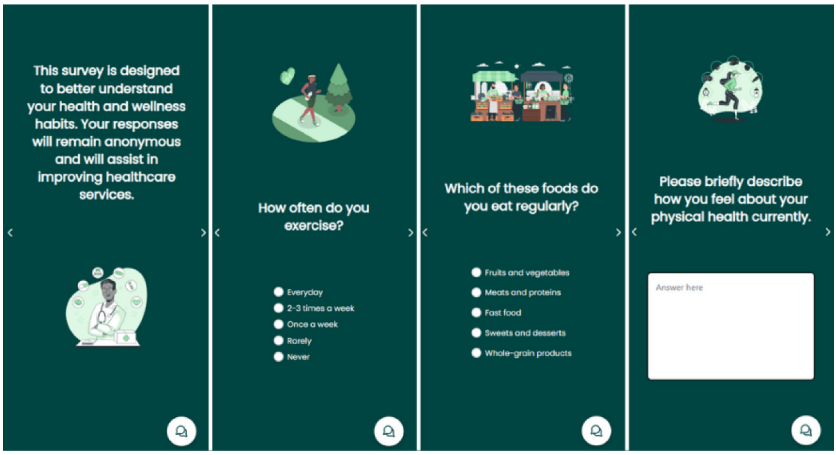

(a) Overview of basic question types: informational, single-choice, multiple-choice, and text input.

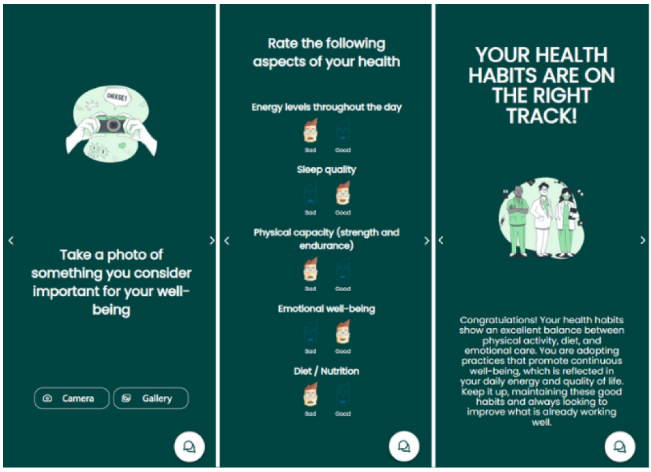

(b) Overview of advanced question types: camera-based, grouped scale, and ranking.

Fig. 2. Overview of the main application question types.

The *Admin Portal* supports configuring, adapting, and reusing questionnaires across applications. These features enhance the reuse of questionnaires with minimal technical intervention. We only described and briefly presented these features, while a full assessment was not the goal of this work.

The work has some limitations. The evidence presented here is based mainly on application deployments and functional demonstrations, rather than on a large-scale comparative user study.

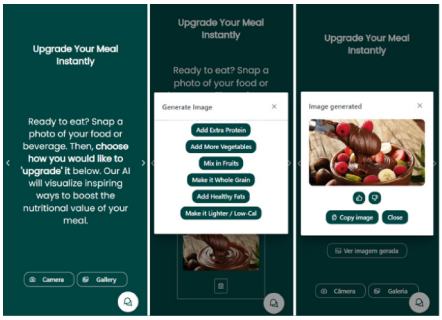

(a) Generative AI workflow based on *img2img* processing.

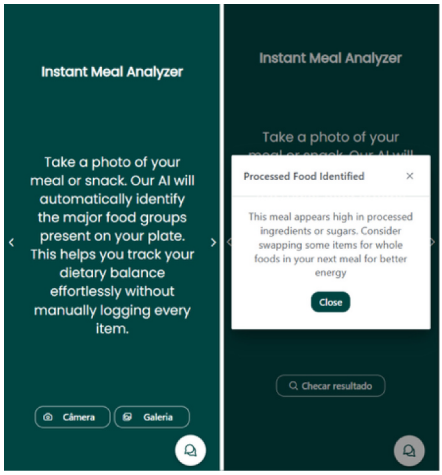

(b) Image classification with automated category identification.

Fig. 3. Overview of the AI-assisted workflows.

In particular, this work does not compare APODigital with existing survey tools in terms of completion time, usability, or data quality. Similarly, although the generic application illustrates the integration of AI-enabled features, the present study does not provide a dedicated assessment of their effectiveness, reliability, or impact on user experience.

These aspects are important directions for future work and motivate a more comprehensive evaluation in subsequent studies.

5 Conclusion

This work presents APODigital, a configurable smart-survey platform that extends traditional digital questionnaires by incorporating multimodal data collection, adaptive navigation, and AI-enabled interactions. The platform combines a PWA frontend, a Django-based backend, and an AI & Data layer optimized to support both structured data from questionnaires and non-structured data from camera sensors.

Using an administrative portal, the APODigital's end user creates and deploys customized survey applications without requiring programming expertise. The questionnaire is a PWA-based application that can run on various device types and maintains a consistent user experience.

To showcase the platform's flexibility, we present three different questionnaires built on it. The two POE applications demonstrate how the platform can support both streamlined and more complex adaptive survey workflows. These POE applications were used in real-world assessments and remain online. While

currently primarily used in various POE scenarios, APODigital supports questionnaires in any area, and its generic evaluation, also available online, showcases its use across domains. The generic evaluation also demonstrates how APODigital's multimodal and AI-enabled capabilities can enable a new type of interaction that expands the smart-survey space.

These examples indicate that APODigital can serve as a reusable foundation for richer and more context-aware digital data collection. By integrating modern web technologies with advanced interaction types, such as camera-based input, grouped evaluations, ranking-based feedback, image classification, and generative AI workflows, the platform expands the design space of questionnaire-based systems beyond conventional web forms.

At the same time, the current study has limitations. The evaluation presented here is primarily based on application deployments and functional demonstrations rather than on a large-scale comparative user study.

In future work, we will focus on broader empirical validation, including usability analysis, completion-time assessment, and comparative studies with existing survey tools, as well as further exploration of privacy, ethics, and data quality issues in multimodal smart survey environments.

Acknowledgment. The authors gratefully acknowledge financial support from the Minas Gerais State Research Foundation (FAPEMIG), Brazil, under Grant #APQ-01727-24, and the institutional support provided by the Office of Research and Graduate Studies of the Federal University of Uberlândia (PROPP/UFU), Brazil.

References

1. Bensfiya, A., Boubih, S., Madrane, M., Janati-Idrissi, R.: Exploring digital alternatives for learning assessment: a comparative study of Google Forms and QCM CAM. Int. J. Sci. Didactics Educ. Eng. **1**, 44–55 (2023). https://doi.org/10.34874/PRSM.ijsdee-vol1iss1.877, https://journals.imist.ma/index.php/IJSDEE/article/view/877
2. Bosch, O.J., Revilla, M., Paura, E.: Answering mobile surveys with images: an exploration using a computer vision API. Soc. Sci. Comput. Rev. **37**(5), 669–683 (2019). https://doi.org/10.1177/0894439318791515
3. Bucher, H., et al.: Smart survey implementation. Workpackage 2: research methodology. Deliverable M6: review stage (2023)
4. Castaño-Rosa, R., Nerweyi, D.: Bringing post-occupancy evaluation up front to enhance energy efficiency in residential buildings. Build. Res. Inf. **53**(8), 1075–1091 (2025). https://doi.org/10.1080/09613218.2025.2538167
5. Giacalone, M., Marciano, C., Pipino, C., Piscopo, G., Marra, S.: Technological innovation and the role of smart surveys in the industrial context. Appl. Sci. **15**(16), 8832 (2025). https://doi.org/10.3390/app15168832, https://www.mdpi.com/2076-3417/15/16/8832
6. Google: Nano Banana image generation (2026). https://ai.google.dev/gemini-api/docs/image-generation

7. Guo, W., Zong, S., Chen, S., Zhao, F., Shang, Y.: Design and implementation of a new serverless conversational survey system. In: 2021 IEEE International Conference on Data Science and Computer Application (ICDSCA), October 2021, pp. 358–363 (2021). https://doi.org/10.1109/ICDSCA53499.2021.9650203, https://ieeexplore.ieee.org/abstract/document/9650203
8. Kassm, M.A.: The virtual reality questionnaire watch: exploring novel methods integrated with Google Forms. Thesis, Carleton University, 19 September 2022. Supervisor: Rob J. Teather. https://repository.library.carleton.ca/files/p8418p298
9. Mccool, D., Lugtig, P., Struminskaya, B.: Integrating smart surveys with traditional surveys. arXiv arXiv:2510.07521 [stat], October 2025. https://doi.org/10.48550/arXiv.2510.07521, http://arxiv.org/abs/2510.07521
10. Morrison, W., Guerdan, L., Kanugo, J., Trull, T., Shang, Y.: TigerAware: an innovative mobile survey and sensor data collection and analytics system. In: 2018 IEEE Third International Conference on Data Science in Cyberspace (DSC), June 2018, pp. 115–122 (2018). https://doi.org/10.1109/DSC.2018.00025, https://ieeexplore.ieee.org/abstract/document/8411846/authors
11. Ollila, R., Mäkitalo, N., Mikkonen, T.: Modern web frameworks: a comparison of rendering performance. J. Web Eng. **21**(3), 789–813 (2022). https://doi.org/10.13052/jwe1540-9589.21311, https://ieeexplore.ieee.org/abstract/document/10243623
12. OpenAI: GPT-4o mini Model API (2026). https://developers.openai.com/api/docs/models/gpt-4o-mini
13. Rama, K., Sudha, R., Prasad, G.: An innovative way of asking questions using google forms. NeuroQuantology **20**, 20–1477 (2022). https://doi.org/10.48047/NQ.2022.20.20.NQ109150
14. Schouten, B., Lugtig, P., Luiten, A.: Can smart surveys have a positive business case? An evaluation based on three case studies. J. Off. Stat. **41**(2), 547–568 (2025). https://doi.org/10.1177/0282423X251321634
15. Valenzuela, S., Winter, S., Rivera, S.: Using large language models for survey research in communication: opportunities and challenges. Commun. Change **1**(1), 14 (2025). https://doi.org/10.1007/s44382-025-00014-z