Low-Cost Wearable System for Essential Tremor Monitoring with Passive Damping

Gustavo Adolpho Bonesso[1], Carlos Marcelo Gurjão de Godoy[1(✉)], Eliana Chaves Ferretti[2], and Regina Célia Coelho[1]

[1] Science and Technology Institute, Federal University of São Paulo, São José Dos Campos, SP, Brazil
gurjao.godoy@unifesp.br

[2] Institute of Health and Society, Federal University of São Paulo, Santos, SP, Brazil

Abstract. Essential tremor (ET) is a progressive neurological disorder causing involuntary upper-limb oscillations that impair fine motor control and daily independence. Monitoring and attenuating such biomechanical vibrations represent a significant challenge in wearable device design. Using ET as a practical use case—characterized by oscillations in the 2–10 Hz range—this study presents the design and development of a low-cost, customizable embedded system that helps overcome that challenge. The hardware consists of a passive weighted bracelet fabricated via additive manufacturing, integrated with an ESP32-based inertial sensing module for continuous data acquisition. To reduce the microcontroller's computational load, the system employs an onboard time-domain version of a traditional frequency-domain period extraction algorithm. The sensing architecture was evaluated through a controlled damped-harmonic-oscillator bench test, using a high-precision laboratory rotary motion sensor as the ground-truth reference. When testing the empty bracelet, the embedded accelerometer recorded a frequency of oscillation of 2.99 Hz (SD = 0.044) and decreased to 2.50 Hz (SD = 0.004) with the addition of a 137 g weight to the bracelet. The change in the oscillatory frequency shows the principle of passive inertial damping and the success in using the embedded hardware for ET monitoring.

Keywords: essential tremor · assistive technology · weighted bracelet · inertial sensors · additive manufacturing

1 Introduction

Essential tremor (ET) is a chronic neurological movement disorder characterized by involuntary rhythmic oscillations of the upper limbs. The oscillation frequency range is normally from 2 Hz to 10 Hz [1, 2]. ET affects fine motor control, impacting the patient's autonomy in daily activities like eating, writing, and personal care [3, 4]. It doesn't reduce the patient's life expectancy, but the high prevalence of the disorder in the elderly impacts public health [1].

Conventional treatment options include pharmacological methods involving beta-blockers, anticonvulsants, and botulinum toxin injections, or invasive procedures, such

© The Author(s), under exclusive license to Springer Nature Switzerland AG 2027
O. Gervasi et al. (Eds.): ICCSA 2026, LNCS 16767, pp. 67–78, 2027.
https://doi.org/10.1007/978-3-032-30491-9_5

as deep-brain stimulation (DBS) in severe cases [5]. However, these options have significant limitations that includes side effects, varying effectiveness, high costs, and limited availability, especially in low-resource settings [5]. These issues have motivated increasing interest in alternative or complementary solutions that are non-invasive, affordable, and easy to use.

Assistive technologies that use mechanical concepts are gaining prominence and importance. Weighted gloves and wristbands are passive devices that use mechanical concepts such as mass inertia to reduce tremors by altering the dynamic response of the limb without using active control systems [6, 7]. Some users of these passive devices report functional improvements, but others indicate differences in clinical evidence, showing that many solutions still need to be systematically implemented [8].

Wearable sensor technologies and mobile health systems have advanced, permitting continuous and objective monitoring of movement and related symptoms in real-life environments [9–11]. Inertial measurement units (IMUs), which include accelerometers and gyroscopes, are used to monitor and estimate tremor characteristics such as frequency of oscillation, amplitude, and the variation of these parameters over time [7, 9, 11]. However, these systems are focused on monitoring tremors and are not capable of direct physical intervention or successfully reducing tremors. This shows that there is a gap in combining passive tremor reduction strategies with embedded digital sensing systems. Filling this gap can be beneficial in two ways: reducing tremors and enabling objective evaluation of the effectiveness of these devices, increasing the customization of solutions, and improving clinical validation.

This study suggests the design and development of a low-cost, customizable wearable system, combining a passive wristband with weight recipients and an embedded tremor sensing module. The system utilizes additive manufacturing to allow for design flexibility and rapid iterations, and an embedded sensing system with software optimized for low operating costs.

The main contribution of this work is the development of a device that combines passive inertial damping with an integrated embedded sensing module, enabling real-time tremor monitoring, as validated through controlled bench tests. Below is a list of particular contributions of this work:

1. The design and implementation of a prototype device that combines passive mechanical tremor attenuation with integrated real-time monitoring, filling the identified gap between assistive technologies and embedded sensor monitoring.
2. A method that allows the calculation of frequency of oscillation using raw accelerometer data, based on time-domain analysis, which is computationally optimized and, consequently, suitable for embedded systems having minimal processing capacity and low power consumption requirements.
3. An integrated, low-cost prototype fabricated using additive manufacturing techniques (3D printing) offering a flexible device for customized tremor management.
4. An experimental assessment method for the bracelet's embedded sensing module using a controlled mass-spring system equipped with reference sensors, enabling repeatability and quantitative evaluation of the system's performance.

5. Experimental evidence showing the effectiveness of passive inertial damping, confirming the viability of this solution as a wearable device for tremor reduction in patients.

2 Related Works

This research on assistive technologies for essential tremor (ET) developed a method to reduce tremor using a bracelet with embedded sensors for tremor assessment and monitoring. Methods to reduce ET can be classified into passive and active systems. As examples of passive devices, we can mention weighted gloves, wristbands, and orthopedic supports. Physical principles such as the addition of mass, inertia, and damping are used to reduce oscillatory movement [4, 6]. Passive solutions have low complexity, high safety, and ease of use, making them appropriate for applications in daily life. However, their effectiveness depends heavily on individual factors, such as tremor frequency and amplitude, as well as user habituation to their use. Recent studies and systematic reviews show that clinical evidence from the use of passive devices shows diverse results, with little standardization in assessment protocols and outcome measures [8].

Active and semi-active systems reduce tremor by controlled actuation, using wearable frameworks and stabilization devices that use gyroscopes. These systems produce compensatory forces that suppress the user's involuntary movement [8]. These methods usually result in higher levels of tremor reduction, but they also have some disadvantages in relation to passive devices. The systems are more complex, heavier, consume more energy, and are more expensive. These limitations affect usability and user acceptance, especially for long-term use and in non-clinical settings.

Wearable sensor technologies for the assessment of movement disorders have also been developed. Inertial measurement units (IMUs), composed of accelerometers and gyroscopes, are used to measure tremor characteristics such as frequency, amplitude, and their variation over time [7, 9, 11]. With these sensors, continuous monitoring is possible, supporting both clinical assessment and remote health applications. With these technologies integrated into mobile health platforms, the possible applications increase, allowing data collection under practical conditions [9–11].

Using signal processing, tremor analysis is typically performed using frequency-domain techniques, such as the Fast Fourier Transform (FFT), which allows the identification of dominant oscillatory components [11]. However, these approaches can demand high processing power, making their use unfeasible on low-power embedded platforms. It is necessary to develop alternative methods that can reduce the demand for processing power, but that have good accuracy for real-time use [11].

Many systems that aim to reduce tremors do not have integrated monitoring capabilities, making it difficult to objectively measure their effectiveness. Wearable sensors provide detailed data on movement, but do not directly reduce tremors.

In this way, personalized and data-centric assistive technologies are limited. Therefore, there is a need to develop integrated solutions that can act to reduce tremor but also have embedded sensors as well as real-time processing. Systems with these combined characteristics have the potential to provide functional assistance and quantitative monitoring simultaneously, granting more effective clinical evaluation, personalization, and validation of assistive devices for TE.

3 Proposed System Architecture

This work proposes to develop a low-cost system aimed at reducing tremors and enabling their monitoring. The system combines a passive mechanical component – the bracelet – with embedded electronic sensors, creating a solution that integrates physical assistance for tremor reduction and data collection on a single platform. Figure 1 shows the proposed system, composed of two main components: (i) a passive weighted bracelet, manufactured by additive manufacturing, and (ii) an embedded inertial sensor module.

3.1 Mechanical Design and Additive Manufacturing

The bracelet was designed in modules with a compartment for inserting weights (lead material), allowing for an adjustable mass of up to 600 g. The prototypes were made using PLA filaments, allowing for various iterations and evaluation of ergonomics, flexibility, and durability. The choice of PLA (polylactic acid) for the initial prototypes resulted in a lightweight yet rigid bracelet capable of supporting the weights used in the initial tests.

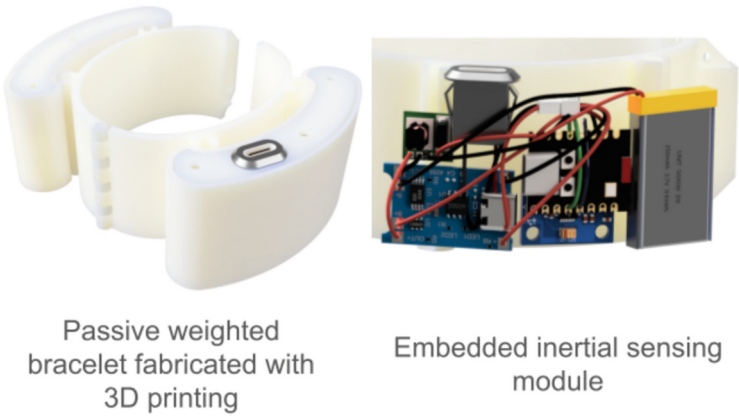

Fig. 1. Overview of the proposed system. On the left, we show the passive weighted wristband, manufactured using additive manufacturing, with the weight distribution containers. On the right, we have the embedded inertial sensor module, showing the ESP32 microcontroller, the triaxial accelerometer, and the power supply.

The magnetic clasps were designed to make it easier to close the bracelet with just one hand, as patients may have difficulty due to motor limitations caused by tremors. The design process involved several cycles of prototyping and refinement.

3.2 Embedded Electronics and Sensing

The design of the solution's electronic module took into account the need for low power consumption to extend usage time without recharging, reliable sensor data acquisition, and a compact size that would allow the module to be embedded in the

bracelet. Figure 2 shows the functional block diagram. The central component is the ESP-32 microcontroller, a 32-bit single-core RISC-V processor suitable for embedded processing.

Motion data is collected by an MPU-6050 Inertial Measurement Unit (IMU) via the accelerometer. The IMU communicates with the microcontroller using the I2C protocol through the SDA and SCL pins. The acceleration of the three axes is captured at a sampling rate of 100 Hz, exceeding the Nyquist rate requirements for the typical frequency range of tremors we want to capture, which is between 2 Hz and 10 Hz. In this way, the vibration signal information can be successfully collected.

The power for the microcontroller and IMU is provided by a 3.7V Lithium Polymer (Li-Po) battery. The charging of the battery is done via a USB-C port using a TP4056 battery charger, which ensures safe charging. The microcontroller and IMU are powered with 5V, so a DC-DC (step-up) converter is used to increase the battery voltage from 3.7V to 5V. This embedded hardware configuration provides for uninterrupted monitoring of tremor frequency.

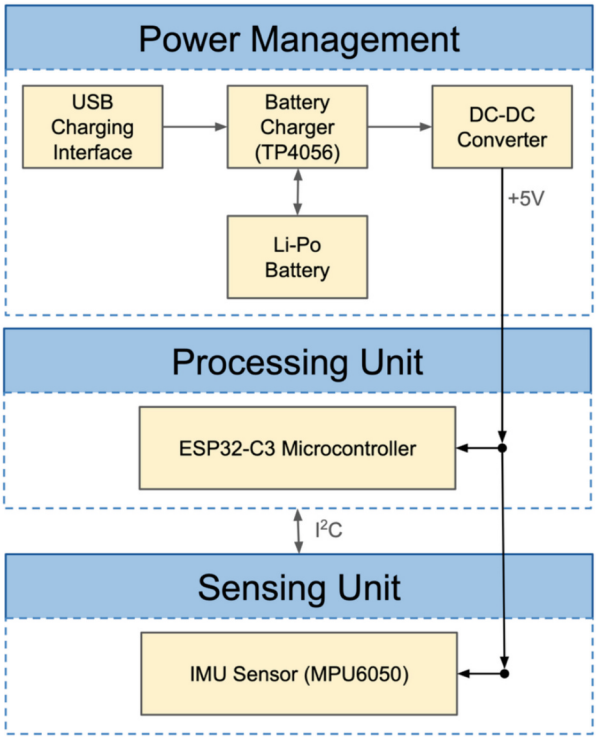

Fig. 2. The functional block diagram of the electronic module is divided into three parts: The power management unit, where battery charging occurs using the TP4056 and the battery voltage is increased from 3.7V to 5V; the processing unit using the ESP-32 microcontroller; and the sensing unit using the MPU-6050 accelerometer to monitor movement. The I^2C communication protocol between the microcontroller and the IMU, and the 5V power supply lines, are also shown in the diagram.

4 Methods

We used continuous improvement methodologies and iteration cycles in the development of this work, with a technological research approach and an emphasis on technical feasibility.

4.1 Bench Testing and Sensor Validation

To validate the sensing module, we performed a bench test using a damped harmonic oscillator model. The bracelet, printed using additive manufacturing (3D printing), was suspended by a spring mechanism that approximately replicate the oscillation of a human arm at a given frequency. Figure 3 shows the experimental arrangement used for sensor validation.

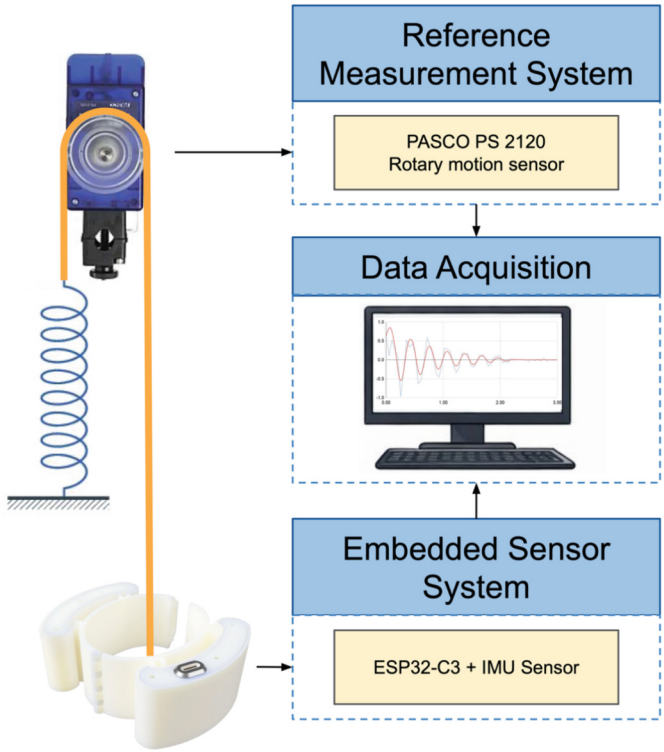

Fig. 3. Setup of the damped harmonic oscillator bench test connecting the mass-spring system to the bracelet, carried out to validate the bracelet's embedded sensing module. The functional block diagram shows that data from the bracelet's sensing module is collected simultaneously with data from the PASCO rotary motion sensor for later comparison and validation.

Data Acquisition Protocol: The experiment protocol recorded the system oscillation using the first configuration, with the weight container empty (0 g), and the second

configuration, with 137 g of mass (lead material) added to the weight container. Four independent trials were performed for each of these two conditions for ensuring statistical repeatability.

Signal Processing Optimization: The Fast Fourier Transform (FFT) is an algorithmically expensive frequency domain transformation. To calculate the frequency of oscillation using only the raw triaxial acceleration data obtained directly from the MPU-6050 sensor at a sampling rate of 100 Hz, we used only the time domain. The period (T) between consecutive peaks of the acceleration signal is measured, and the frequency is calculated ($f = 1/T$). This method decreases the processing load and power consumption of the ESP-32 microcontroller, keeping the accuracy of frequency calculation in the range of 2 to 10 Hz.

The data obtained by the bracelet's embedded sensing module were validated using a high-precision PASCO rotary motion sensor (PS-2120). This sensor was coupled to the test setup to serve as a reference. The PASCO sensor data were recorded using DataStudio software at a sampling rate of 100 Hz, simultaneously with the data acquisition performed by the bracelet's embedded system. The comparison between the period (T) measured between consecutive peaks in the graph with the PASCO sensor data and the data obtained by the bracelet's embedded system shows the accuracy of the low-cost embedded system developed in this work.

5 Results

Bench testing confirmed both the reliability of the embedded sensor and the effectiveness of the mechanical design. To evaluate the repeatability of the time-domain peak-to-peak calculation method, four independent trials were conducted for each mass configuration.

The oscillation frequency measured simultaneously by either the PASCO rotary motion sensor and the Embedded Sensor System, was essentially the same. Figure 4 compares the signals collected by the PASCO reference sensor and the signal collected by the bracelet's embedded sensing module over time.

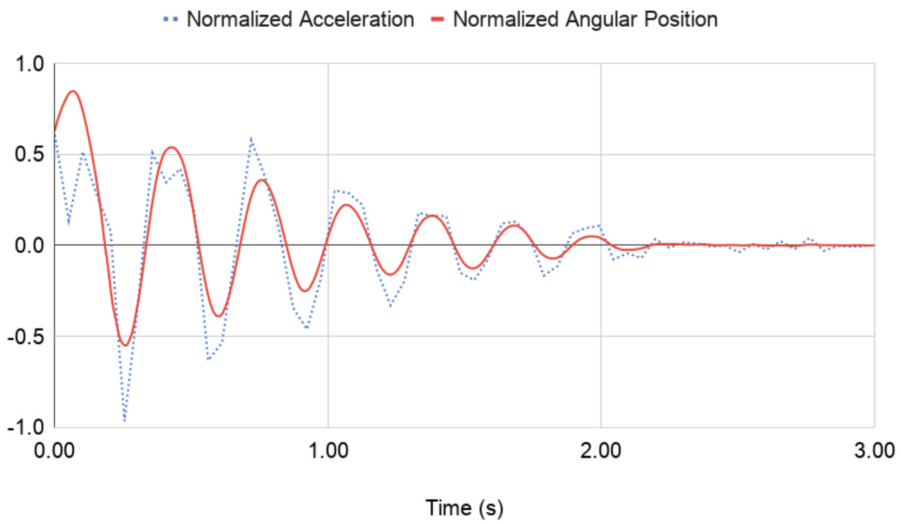

Fig. 4. The graph shows the comparison between the signal collected by the PASCO reference sensor and the signal collected by the bracelet's embedded sensing module over time. The red curve shows the normalized angular position collected by the high-precision PASCO laboratory sensor, and the dashed blue curve shows the normalized raw acceleration data collected by the embedded sensing module. The alignment between the signals is consistent, peak-to-peak, validating the use of the embedded sensing module and the integrated period extraction method for frequency calculation.

As shown in Table 1, the ESP32 successfully and consistently measured an average oscillation frequency of 2.99 Hz (SD = 0.044) when the bracelet's weight compartment was empty. After filling the internal container to its maximum mass capacity (137 g), the average measured oscillation frequency reliably decreased to 2.50 Hz (SD = 0.004). The tests showed a low standard deviation, indicating that the bracelet's embedded sensing module successfully collected data stably and that the frequency calculation algorithm worked well.

Table 1. Oscillation frequencies measured in the damped harmonic oscillator bench test trials performed with the bracelet loaded and unloaded.

Test Condition	Trial 1 (Hz)	Trial 2 (Hz)	Trial 3 (Hz)	Trial 4 (Hz)	Mean (Hz)	SD (Hz)
Empty Compartment (0 g)	3.03	3.01	2.97	2.93	2.99	0.0441
Fully Weighted (137 g)	2.49	2.50	2.49	2.50	2.50	0.0036

The frequency change validates the principle of passive inertial damping, according to mass-spring dynamics. Adding mass reduces the natural frequency of the mechanical system. The results show that the bracelet's embedded sensing module is able to collect

the dynamic vibrations produced in the bench test and that the use of containers with variable mass weight is a viable engineering solution to attenuate oscillations.

6 Discussion

Table 2 compares the contribution of the system proposed in this work with other existing technologies found in the literature. We compare the system type, tremor attenuation capacity, integrated monitoring in the solution, and computational cost.

The combination of passive mechanical tremor attenuation with embedded digital monitoring addresses a gap in existing assistive technologies for essential tremor. The comparison table shows that existing solutions force a choice between the attenuation capacity offered by passive devices and the objective monitoring offered by intelligent devices. The hybrid system proposed in this work combines both features in a single solution with a low-cost platform.

Table 2. Comparison of the characteristics of the system proposed in this work with other existing assistive technologies for tremor.

Approach/Reference	System Type	Tremor Attenuation	Objective Monitoring	Computational Cost
Proposed System	Hybrid/Wearable	Yes (Passive)	Yes	Low (Time-domain analysis)
Traditional Passive Devices (e.g., weighted gloves)	Mechanical/Wearable	Yes (Passive)	No	None
Active Exoskeletons	Robotic/Wearable	Yes (Active)	Yes	High (Complex control loops)
Smartwatches/IMU Trackers	Electronic/Wearable	No	Yes	Medium/High (FFT-based)

According to the principles of biomechanics, the experimental results obtained in the bench test validate the principle of inertial damping. According to the dynamic mass-spring model ($w = \sqrt{k/m}$), an increase in the system's mass results in a diminution in its natural frequency of oscillation, and the data collected by the bracelet's embedded sensing module and validated by the PASCO reference sensor confirm this physical phenomenon. The oscillation rate changes from 2.99 Hz to 2.50 Hz with the addition of 137 g of mass to the bracelet's weight container. Standard deviations of 0.044 for 2.99 Hz and 0.004 for 2.50 Hz reinforce the reliability and repeatability of the measurements performed by the bracelet's embedded sensing module.

The validation of the data collected by the bracelet's embedded sensing module with the high-precision PASCO laboratory sensor (Fig. 4) shows that the calculation of the oscillatory frequency does not require complex frequency domain transformations, such as FFT, which is good news from a computational point of view. The microcontroller

processing load was significantly reduced by using the implemented time-domain period extraction algorithm. This optimization helps increase the battery life of the bracelet and other wearable health devices that need to calculate frequency based on acceleration information.

The technical results are promising, but a number of factors need to be considered when applying the proposed system in real-life situations.

There are many differences in tremor characteristics (frequency, amplitude, and direction) between different patients, and these differences are challenging for developing an efficient passive inertial damping device. The device was validated in the typical tremor frequency range, between 2 and 10 Hz, but individual differences can affect the device's success in real life use. Attenuation depends on the relationship between the mass added to the device in its weight container and the natural frequency of oscillation of the limb. Therefore, using a fixed mass setting may not work for all users. Customized calibration strategies have to be developed to adjust the mass added to the device according to each patient's tremor profile.

Each patient may have an ideal mass for their case, and the modular design of the bracelet allows for this customization, but using excessive mass may cause discomfort, fatigue, and reduce usability for the patient. Conversely, using insufficient mass may not provide the necessary attenuation to reduce tremors. The embedded sensing module can be used to perform necessary adjustments based on collected data, allowing iterative changes to the added mass based on tremor measurements obtained by the system.

The effect of noise within real-world environments can affect the amplitude and frequency estimation generated by the bracelet's integrated sensor module. The peak-to-peak time-domain method showed good accuracy in the controlled, low-noise bench-top environment, but real-world signals are affected by voluntary movements, sensor misalignment, and environmental disturbances, possibly decreasing performance with irregular or non-periodic movements. The use of pre-processing techniques, such as bandpass filtering in the oscillatory frequency range (2–10 Hz) or the combination of multiple sensing axes, can increase robustness in real-life situations.

There are differences between time-domain and frequency-domain approaches, such as the Fast Fourier Transform (FFT). Frequency-domain methods are widely used because they are good at detecting principal oscillatory components, especially in signals with high noise or multiple frequencies. However, the trade-off is that these methods require greater processing power and are not ideal for embedded systems like the one we are proposing in this work. The proposed time-domain method, on the other hand, is much less complex and demands less processing power, making it more suitable for use in embedded systems and wearable devices. However, this method is more vulnerable to noise and signal irregularities and may be less precise when dealing with overlapping frequencies and non-stationary signals. Therefore, the choice of the appropriate method should depend on the specific requirements of the application, balancing computational effectiveness and robustness.

As a whole, the proposed system presents technical feasibility and an integration advantage, but an evaluation under real-world conditions with patients is necessary to have a clearer view of its clinical application in the real world, as well as its usability and long-term efficacy.

7 Future Work

Future work includes clinical validation with patients diagnosed with essential tremor in real-world settings to assess the system's robustness against noise from voluntary movements. Long-term studies are also needed to evaluate the device's ergonomic comfort, quantify continuous battery life, and determine patient adherence to its use. Furthermore, future research will focus on developing a standardized clinical protocol to figure out the optimal mass for each patient, utilizing the embedded sensing module to personalize the attenuation strategy.

8 Conclusion

This study developed a low-cost, 3D-printed wearable system that addresses a gap in essential tremor management by integrating passive mechanical attenuation with real-time embedded monitoring. The implementation of an onboard time-domain period extraction algorithm proved highly effective, allowing accurate tremor frequency calculation with minimal computational load. Furthermore, the evaluation using a controlled mass-spring setup and ground-truth sensors provided a rigorous and repeatable framework to validate the embedded electronics. The experimental evidence confirmed the principle of passive inertial damping, demonstrating a consistent reduction in oscillation frequency when mass was added to the device. Preliminary results show the technical feasibility of the solution and the possibility of combining passive mechanical devices with digital health technologies. The system proposed in this work constitutes a starting point for future clinical studies aimed at improving the autonomy and quality of life of individuals with essential tremor.

Author Contributions. Gustavo Adolpho Bonesso: Conceptualization, Methodology, Software, Formal analysis, Investigation, Data curation, Writing – original draft, review & editing.

Carlos Marcelo Gurjão de Godoy: Conceptualization, Supervision, Methodology, Writing – review & editing.

Eliana Chaves Ferretti: Conceptualization, Methodology, Supervision, Validation, Investigation, Resources, Data curation.

Regina Célia Coelho: Conceptualization, Supervision, Methodology, Project administration, Writing – review & editing.

Funding. This work was developed using resources obtained from the FINANCIADORA DE ESTUDOS E PROJETOS (FINEP) - Ref. Finep nº 2174/22.

Disclosure Statement. The authors declare that they have no conflict of interest.

References

1. Louis, E.D., McCreary, M.: How common is essential tremor? Update on the worldwide prevalence of essential tremor. Tremor Other Hyperkinet. Mov. **11**, 28 (2021). https://doi.org/10.5334/tohm.632

2. Elble, R.J.: What is essential tremor? Topical collection on movement disorders. Curr. Neurol. Neurosci. Rep. **13**, 353 (2013). https://doi.org/10.1007/s11910-013-0353-4
3. Bain, P.G., Findley, L.J., Atchison, P., et al.: Assessing tremor severity. J. Neurol. Neurosurg. Psychiatry **56**, 868–873 (1993). https://doi.org/10.1136/jnnp.56.8.868
4. Manchanda, M.: Gyro glove: stabilizing the lives of those with hand tremor **20**, 4781–4794 (2021). https://doi.org/10.17051/ilkonline.2021.04.514
5. Zesiewicz, T.A., Shaw, J.D., Allison, K.G., et al.: Update on treatment of essential tremor. Curr. Treat. Options. Neurol. **15**, 410–423 (2013). https://doi.org/10.1007/s11940-013-0239-4
6. Adabi, K., Ondo, W.G.: Shaking up essential tremor: peripheral devices and mechanical strategies to reduce tremor. Tremor Other Hyperkinet. Mov. (N. Y). **14**, 55 (2024)
7. Vescio, B., De Maria, M., Crasà, M., et al.: Development of a new wearable device for the haracterization of hand tremor. Bioengineering **10**, 1025 (2023). https://doi.org/10.3390/bioengineering10091025
8. Lora-Millan, J.S., Delgado-Oleas, G., Benito-León, J., Rocon, E.: A review on wearable technologies for tremor suppression. Front. Neurol. **12** (2021)
9. Caroppo, A., Manni, A., Rescio, G., et al.: Movement disorders and smart wrist devices: a comprehensive study. Sensors **25**, 266 (2025). https://doi.org/10.3390/s25010266
10. Del Din, S., Elshehabi, M., Galna, B., et al.: Gait analysis with wearables predicts conversion to parkinson disease. Ann. Neurol. **86**, 357–367 (2019). https://doi.org/10.1002/ana.25548
11. Peng, Y., Ma, C., Li, M., et al.: Intelligent devices for assessing essential tremor: a comprehensive review. J. Neurol. **271**, 4733–4750 (2024)