# Evaluating Skid Resistance of Indoor Pavements Using the Tortus Tribometer and British Pendulum Tester: A Case Study

James Rombi(✉), Marta Salis, Mauro Coni, Nicoletta Rassu, and Francesca Maltinti

Department of Civil Environmental Engineering and Architecture, University of Cagliari, 09042 Cagliari, Italy
james.rombi@unica.it

**Abstract.** Slippery floors are a leading cause of indoor injuries, emphasizing the importance of effective flooring safety assessments. In high-traffic buildings such as hospitals, airports, and schools, ensuring slip resistant surfaces is essential to prevent injuries and reduce costs associated with compensation claims and maintenance. According to Italian legislation, the Tortus Digital Tribometer (TDT) is the standard device used to measure the Coefficient of Friction (CoF) on indoor pavements, ensuring compliance with safety standards established by the British Ceramic Research Association (BCRA). This instrument plays a critical role in evaluating the slip resistance of flooring materials, both in existing structures and during the design phase, to enhance overall safety and reduce the risk of slip-related accidents. In this research, six types of pavements with different materials were analyzed under both wet and dry conditions using both the TDT and British Pendulum Tester (BPT) devices. The data were first analyzed to verify whether the pavements met the Italian regulations and also to explore any potential correlation between the two methods. The study found that the results of the TDT method can be affected by the dimensions of the tile grout and the surface level. Additionally, under wet conditions, deformations in the leather friction pad were observed, leading to questionable measurements. In contrast BPT provided more reliable measurements in both wet and dry conditions.

**Keywords:** Slip resistance · Tortus tester · British pendulum tester · Friction · Safety

## 1 Introduction

In recent years, building design has undergone significant advancements, driven by the need to incorporate safety, sustainability, and innovation. The increasing focus on reducing environmental impact and enhancing safety has redefined building standards, particularly in material selection. In this context, ensuring slip-resistant walking surfaces in high-traffic areas such as hospitals, airports, schools, and commercial facilities is crucial.

© The Author(s), under exclusive license to Springer Nature Switzerland AG 2026
O. Gervasi et al. (Eds.): ICCSA 2025 Workshops, LNCS 15896, pp. 385–400, 2026.
https://doi.org/10.1007/978-3-031-97654-4_24

Recent data indicates that slippery floors are a leading cause of indoor injuries, resulting in physical harm and substantial costs for businesses due to insurance claims and maintenance expenses [1]. This issue underscores the importance of thoroughly evaluating floor safety, which can be effectively assessed using specialized tools like the tribometer.

Safety and sustainability remain fundamental pillars of modern construction. Safety has become a priority in building design and management. This aspect is crucial in high-traffic environments such as hospitals, airports, schools, and universities, as well as in industrial settings.

Flooring safety plays a key role in preventing slips, trips, and falls, which remain one of the leading causes of injuries in both workplaces and public or private spaces.

It is regulated by specific standards aimed at reducing the risk of slips and falls in buildings. A technical and legislative framework exists at both European and national levels, ensuring compliance with legal requirements and protecting the health of workers, students, and visitors.

The UNI EN 16165:2021 [2] standard, where UNI is the Italian National Standardization Body and EN stands for European Norm, standardizes methods for measuring the slip resistance of pedestrian surfaces across the EU, ensuring flooring meets safety requirements. It defines structured testing protocols for various conditions, providing a consistent approach to pedestrian surface safety.

Complementary standards include EN 13036-4 [3], which uses the Pendulum Test Method (PTM) to determine the coefficient of friction on wet and dry surfaces, and DIN 51131:2008 [4] where DIN is the German Institute for Standardization, which employs a tribometer for dynamic friction measurements in industrial and commercial settings. Additionally, the British Standard BS 7976:2002 [5] specifies slip resistance testing using the British Pendulum Tester (BPT) under various conditions, including contamination scenarios.

Italian regulations on workplace safety and building accessibility are governed by Ministerial Decree DM 236/89 [6] and Legislative Decree D.Lgs. 81/2008 [7]. DM 236/89 establishes technical requirements for the elimination of architectural barriers, setting criteria for flooring, ramps, and pedestrian pathways. It also mandates the use of slip-resistant surfaces to reduce the risk of slipping, with particular attention to the needs of people with disabilities.

D.Lgs. 81/2008, Italy's workplace safety consolidation act, establishes preventive measures to protect workers, including reducing slip hazards. Article 63 mandates the stability of workplace flooring, while annex IV requires the use of materials that minimize tripping risks. Employers must evaluate slip risks in the risk assessment document, considering flooring characteristics and environmental conditions.

Supporting these regulations, UNI 11583:2015 [8] defines technical parameters for measuring slipperiness, ensuring compliance and promoting safe, inclusive design in workplaces and public environments.

In addition to preventing accidents, regulatory compliance enhances the reliability and professionalism of structures, influencing the strategic management of buildings. The adoption of materials and technologies that meet safety requirements promote sustainable and innovative construction practices.

The tribometer is an instrument for evaluating pavement slipperiness, measuring the Coefficient of Friction (CoF) with advanced technology to uphold high safety standards. Beyond assessing existing surfaces, it also plays a crucial role in the design phase, guiding material selection and maintenance strategies to enhance building sustainability.

This study presents a comparative experimental campaign conducted on various surface types, examining the differences between the Tortus Digital Tribometer (TDT) the standard device mandated by Italian legislation for measuring the CoF on indoor pavements, and the British Pendulum Tester (BPT) based on the British Standard. The novelty of this research lies in its systematic evaluation of two widely adopted yet methodologically distinct instruments, offering new insights into their comparative accuracy, applicability, and limitations in real-world building contexts. This analysis contributes to the ongoing discourse on standardizing friction measurement tools across different regulatory frameworks and design environments.

## 2 Materials and Methods

Floor slipperiness is a critical factor in safety and accident prevention, affected by materials, wear, and surface treatments [9]. Smooth surfaces like polished marble become more slippery when contaminated, while textured materials and anti-slip treatments improve grip. Wear reduces friction, requiring regular maintenance, and treatments like waxes or detergents can alter surface texture [10].

Environmental factors such as water, oil, and dust lower friction, especially in kitchens or workshops, where proper cleaning is crucial [11]. Lighting and human factors, including footwear and movement, also impact slip risk. The CoF measures the resistance between surfaces, helping assess slip potential.

In indoor flooring design, the CoF is essential for ensuring user safety by minimizing the risk of slips and falls, while also contributing to the durability and sustainability of the materials used. It is defined as the ratio of the friction force (F) to the normal force (N) acting between the surfaces and is represented by the Eq. 1 below:

$$\mu = F/N \tag{1}$$

- μ: coefficient of friction (dimensionless).
- $F$: friction force (in Newtons, N), which is the force opposing the relative motion between surfaces.
- N: normal force (in Newtons, N), which is the force perpendicular to the contact surface.

There are two main types of the coefficient of friction:

- Static coefficient of friction (μs): indicates the resistance to the initial movement between two contacting surfaces and is generally higher than the dynamic coefficient, as adhesion forces are stronger when the surfaces are at rest. The condition for the onset of movement is expressed by an inequality (2):

$$F_{applied} \geq \mu_S * N \tag{2}$$

- Dynamic coefficient of friction (μd): describes the resistance during the relative motion of surfaces and is usually lower than the static coefficient, as adhesion forces decrease during sliding.

The dynamic friction force is given by the Eq. 3:

$$F = \mu_d * N \tag{3}$$

In indoor flooring, the dynamic coefficient of friction is crucial as it defines how surfaces behave during walking, when the shoe sole moves continuously across the floor instead of staying still.

The coefficient of friction is a key parameter in ensuring flooring safety and must therefore be analyzed with precision. Its measurement can be performed both in the laboratory and on-site. This study examines tests conducted in situ tests using the BPT and TDT.

### 2.1 British Pendulum Tester

The BPT as shown in Fig. 1 is a portable device used to measure the coefficient of friction on-site, particularly in high-traffic road and indoor flooring applications. Widely used in the United Kingdom, it is recognized by the Health and Safety Executive (HSE) BS 7976 standard, as an effective, reliable, and reproducible method for assessing flooring surfaces. Manufacturers also utilize it to verify the certification of materials and coatings.




**Fig. 1.** British Pendulum Tester used for testing (image taken during testing campaign).

The BPT (see. Fig. 2) uses a pendulum with a standardized rubber slider to measure the energy lost during sliding, converting it into a coefficient of friction value. It is a portable, easy to use device suitable for both laboratory and on-site testing on dry and

wet surfaces. It provides quick and repeatable results, directly measuring the dynamic friction between the slider and the test surface. Higher Slip Resistance Value (SRV), British Pendulum Number (BPN), or Pendulum Test Value (PTV) indicate a lower risk of slipperiness.

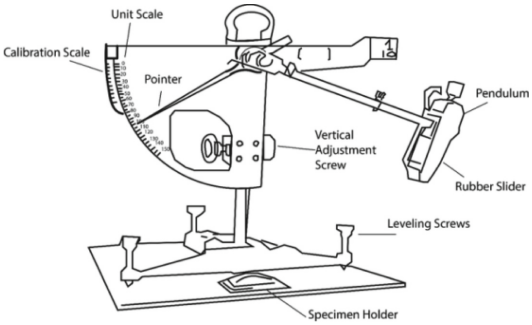


**Fig. 2.** Operating diagram of the British Pendulum (google image).

The British Pendulum Tester operates on the principle of energy dissipation during the pendulum's motion, where the friction force is indirectly calculated through the pendulum's energy loss (see Eq. 3):

$$PTV = k * E/L \tag{3}$$

- E: is the dissipated energy (in Joules, J)
- L: is the length of the slider's path (in meters, m)
- k: is a calibration constant specific to the instrument

The PTV is correlated with the probability of slip and defines different levels of slip potential as reported in Table 1.

**Table 1.** Probability of slip.

| Level Of Slip Potential | Rating | Probability of slip |
|---|---|---|
| High Slip Potential | 0-24 PTV | Up to 1 in 20 |
| Moderate Slip Potential | 25-35 PTV | 1 in 100,000 |
| Low Slip Potential | 36+ PTV | 1 in 1.000.000 |
| Extremely low Slip Potential | 75+ PTV | less than 1 in 1,000,000 |

From the SRV value, the CoF can be derived using the formula found in scientific literature (see Eq. 4) [12]:

$$CoF = (3 * SRV)/(330 - SRV) \tag{4}$$

CoF: Coefficient of Friction
SRV: Slip Resistance Value

### 2.2 Tortus Digital Tribometer

The Tortus Tribometer (see Fig. 3), developed by BCRA, is a high-precision instrument for measuring the coefficient of friction directly on surfaces, assessing slip risks in real conditions. It features a rotating slider made of standardized materials like rubber or leather, ensuring consistent and reliable results. Key benefits include portability, test repeatability, and adherence to Italian anti-slip safety standards. However, its high cost remains a drawback.

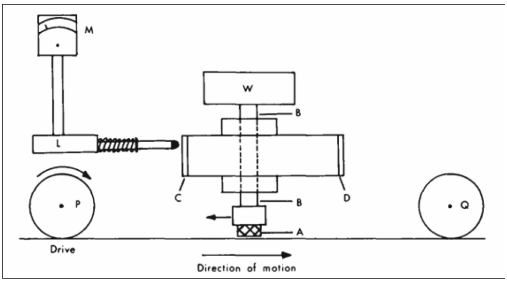


**Fig. 3.** BCRA Tortus Tester – Operatig diagram (google immage).

The friction force is measured through integrated sensors and converted into a dynamic coefficient of friction (μ) value using the Eq. 5:

$$\mu = \frac{F}{N} \tag{5}$$

F is the measured friction force (in Newtons, N).
N is the normal force, the weight applied to the slider (in Newtons, N), which remains constant and is determined by the instrument calibration.

Flooring is classified into four categories, reported in Table 2, based on the dynamic coefficient of friction, with a value of $\mu \geq 0.40$ is considered safe.

**Table 2.** Categories of the coefficient of friction.

| Coefficient Of Dynamic Friction | |
|---|---|
| $\mu \leq 0{,}19$ | Dangerous Slipperness |
| $0{,}20 \leq \mu \leq 0{,}39$ | Excess Slipperness |
| $0{,}40 \leq \mu \leq 0{,}74$ | Satisfactory Friction |
| $\mu \geq 0{,}75$ | Excellent Friction |

## 3 Analysis

An experimental study was conducted to measure the CoF and evaluate the slip resistance of six flooring surfaces under both dry and wet conditions. The objective was to verify compliance with safety standards and to compare the performance of two measurement devices: the internationally widely used BPT and the TDT, specified by Italian regulations.

For each tested flooring surface, a straight alignment approximately 3 m in length was selected. Along this alignment, TDT tests were conducted under both dry and wet conditions using both rubber and leather pads. The TDT collected measurements at a rate of one reading per second, and average CoF values were calculated for each alignment.

On the same alignments, two sections were selected for BPT testing. Section 1 corresponded to the location where the first ten TDT measurements were taken, and the results were compared with the corresponding average TDT values. Section 2 was located at the end of the alignment, corresponding to the last ten TDT measurements. This setup enabled a direct comparison between the two devices across consistent surface conditions. The Dynamic Slip DS Tribometer (see Fig. 4) measures the dynamic coefficient of friction (CoF) using the BCRA method. Weighing 8.5 kg and measuring 390 × 240 mm, it is equipped with a 9 mm diameter rubber slider under a 200 g load. The system records deviations using leaf springs while moving at a constant speed of 17 mm/s, with data processed by microcontrollers. It is possible to set the acquisition time; by default, the device records one reading per second, but it can be configured to perform up to 10 readings per second.




**Fig. 4.** Dynamic Slip DS (image taken during testing campaign).

The CoF is expressed as a percentage: $\mu < 0.40$ indicates a slippery surface, while $\mu \geq 0.40$ is considered safe. The device is calibrated before use and can operate with rubber or leather sliders on dry or wet surfaces, displaying results on its digital screen.

The BPT was used to measure the dynamic coefficient of friction between the rubber slider and the test surface, providing the SVR, also known as BPN or PTV.

The instrument, supported by three bases, features a pendulum arm with a 750 mm × 250 mm rubber slider. After calibration, the slider impacts the surface at 50 km/h to measure slip resistance. Precise marking ensured accurate repositioning under different conditions. Additionally, scientific literature establishes correlations between pendulum test results and the BCRA method, as specified in Eq. 4. Other correlations have also been obtained but not used in this research.

### 3.1 Case Study

In this research, six different types of flooring (see Fig. 5) with different materials were tested in both wet and dry conditions using both the TDT and the BPT.




**Fig. 5.** Different types of flooring (images taken during testing campaign).

Each of them had specific characteristics in terms of materials, tile dimensions and grout joint dimension reported in Table 3.

Measurements were conducted under both dry and wet floor conditions using the TDT and the BPT. For the TDT, tests were performed using both rubber and leather pads, while for the BPT, only the rubber pad was used, as it is the sole available option for this device. Table 4 presents the average CoF values obtained on flooring 1 using the TDT, compared with those obtained using the BPT. The TDT test was carried out along a 3.00 meter strip, yielding a total of 130 measurements. In contrast, BPT measurements were taken at two specific sections. Section 1 corresponds to the positions of the first ten measurements performed with the TDT rubber pad under both dry and wet conditions.

**Table 3.** Tile dimension and characteristics.

| Material | | Dimension (cm) | Grout joint (cm) |
|---|---|---|---|
| Floor 1 | Graniglia tiles | 20*20 | 0.02 |
| Floor 2 | Porcelain tiles | 20*20 | 0.02 |
| Floor 3 | Porcelain tiles | 33*33 | 0.05 |
| Floor 4 | Terra cotta tiles | 7*14.5 | 0.03 |
| Floor 5 | Linoleum | 60*60 | 0.01 |
| Floor 6 | Orosei limestone | 30*60 | 0.05 |

**Table 4.** Average measurement values TDT vs BPT Floor 1.

| TDT (Dry flooring) | | TDT (Wet flooring) | | BPT (Dry flooring) | | BPT (Wet flooring) | |
|---|---|---|---|---|---|---|---|
| Nr Measures | 130 | Nr Measures | 130 | Section | BPN | Section | BPN |
| Rubber Pad (CoF) Value | 0.34 | Rubber Pad (CoF) Value | 0.47 | 1 Rubber Pad | 60 | 1 | 21 |
| Leather Pad (CoF) Value | 0.28 | Leather Pad (CoF) Value | 0.53 | 2 Rubber Pad | 61 | 2 | 16 |

Section 2, corresponds to the positions of the last ten measurements performed with the rubber pad of TDT under both dry and wet conditions.

The CoF value is below the minimum threshold of 0.40, indicating excessive slipperiness on the dry floor. However, on the wet flooring, the coefficient of friction exceeds 0.40, showing that in wet conditions, the value meets the specifications.

The data obtained using the BPT show that the BPN values are acceptable on dry floors but decrease significantly under wet conditions, as expected. The conversion formula from the SRV to the CoF, as reported in the scientific literature, was applied to evaluate potential correspondence or similarity with the values obtained using the slip meter (see Table 5).

**Table 5.** CoF Calculation using Eq. 4.

| CoF dry condition | | | | CoF wet condition | | |
|---|---|---|---|---|---|---|
| | TDT (CoF) | BPT (BPN) | CoF Calculated | TDT (CoF) | BPT (BPN) | CoF Calculated |
| Section 1 | 0.35 | 60 | 0.67 | 0.48 | 21 | 0.21 |
| Section 2 | 0.32 | 61 | 0.69 | 0.45 | 16 | 0.16 |

Table 6 reports the measurements taken with the TDT on flooring 2, both in dry and wet conditions, using both the rubber and leather pads.

**Table 6.** Average measurement values TDT vs BTP Floor 2.

| TDT (Dry flooring) | | TDT (Wet flooring) | | BPT (Dry flooring) | | BPT (Wet flooring) | |
|---|---|---|---|---|---|---|---|
| Nr Measures | 130 | Nr Measures | 130 | Section | BPN | Section | BPN |
| Rubber Pad (CoF) Value | 0.28 | Rubber Pad (CoF) Value | 0.35 | 1 Rubber Pad | 38 | 1 | 14 |
| Leather Pad (CoF) Value | 0.28 | Leather Pad (CoF) Value | 0.46 | 2 Rubber Pad | 54 | 2 | 13 |

The CoF value is below the minimum threshold limit of 0.40 in the dry floor, indicating excessive slipperiness. On the wet floor, however, the coefficient of friction CoF with the leather pad exceeds 0.40.

The analized sections with the BPT, conducted in both dry and wet conditions using the rubber pad are acceptable on dry floor but decreases drastically when the floor is wet. The conversion formula from the pendulum SRV value to the CoF, was applied to assess a possible correspondence or similarity with the slip meter values (see Table 7).

**Table 7.** CoF Calculation using Eq. 4.

| CoF dry condition | | | | CoF wet condition | | |
|---|---|---|---|---|---|---|
| | TDT (CoF) | BPT (BPN) | CoF Calculated | TDT (CoF) | BPT (BPN) | CoF Calculated |
| Section 1 | 0.29 | 38 | 0.39 | 0.38 | 14 | 0.13 |
| Section 2 | 0.17 | 54 | 0.59 | 0.34 | 13 | 0.12 |

Table 8 reports the measurements taken with the TDT on floor 3, both in dry and wet conditions, using both the rubber and leather pads. The test was conducted on a 3.20 meter strip, for a total of 200 measurements.

The CoF value is below the minimum threshold limit of 0.40 in the dry floor, meaning the flooring does not meet the minimum safety standards due to excessive slipperiness. On the wet floor, however, the CoF exceeds 0.40 with the leather pad.

BPN values were recorded from the analyzed sections under both dry and wet conditions, using the rubber pad. Using the BPT, the SRV value is acceptable on dry floor but decreases when the floor is wet.

The conversion formula from the Pendulum SRV value to the CoF, as reported in the scientific literature, was applied to assess a possible correspondence or similarity with the slip meter values (see Table 9).

**Table 8.** Average measurement values TDT vs BPT Floor 3.

| TDT (Dry flooring) | | TDT (Wet flooring) | | BPT (Dry flooring) | | BPT (Wet flooring) | |
|---|---|---|---|---|---|---|---|
| Nr Measures | 200 | Nr Measures | 200 | Section | BPN | Section | BPN |
| Rubber Pad (CoF) Value | 0.32 | Rubber Pad (CoF) Value | 0.35 | 1 Rubber Pad | 52 | 1 | 12 |
| Leather Pad (CoF) Value | 0.27 | Leather Pad (CoF) Value | 0.45 | 2 Rubber Pad | 41 | 2 | 16 |

**Table 9.** CoF Calculation using Eq. 4.

| CoF dry condition | | | | CoF wet condition | | |
|---|---|---|---|---|---|---|
| | TDT (CoF) | BPT (BPN) | CoF Calculated | TDT (CoF) | BPT (BPN) | CoF Calculated |
| Section 1 | 0.50 | 52 | 0.56 | 0.35 | 12 | 0.11 |
| Section 2 | 0.27 | 41 | 0.43 | 0.37 | 16 | 0.15 |

Table 10 reports the measurements taken with the TDT on floor 4, both in dry and wet conditions, using both the rubber and leather pads. The test was conducted on a 3.20 meter strip, for a total of 168 measurements.

**Table 10.** Average measurement values TDT vs BPT Floor 4.

| TDT (Dry flooring) | | TDT (Wet flooring) | | BPT (Dry flooring) | | BPT (Wet flooring) | |
|---|---|---|---|---|---|---|---|
| Nr Measures | 168 | Nr Measures | 168 | Section | BPN | Section | BPN |
| Rubber Pad (CoF) Value | 0.36 | Rubber Pad (CoF) Value | 0.48 | 1 Rubber Pad | 53 | 1 | 25 |
| Leather Pad (CoF) Value | 0.33 | Leather Pad (CoF) Value | 0.56 | 2 Rubber Pad | 48 | 2 | 26 |

The CoF value is below the minimum threshold limit of 0.40 in the dry floor, meaning the flooring does not meet the minimum safety standards due to excessive slipperiness. On the wet floor, however, the CoF exceeds 0.40 for both pads, with the leather pads showing a higher value.

The values recorded from sections analyzed with the BPT, conducted in both dry and wet conditions using the rubber pad. Using the BPT, the SRV value is acceptable on dry floor but decreases when the floor is wet.

In this analysis, a comparison between the TDT and the pendulum was not possible, as section 1 and 2 of the pendulum did not align with the first and last 10 measurements of the tribometer due to insufficient space for conducting the tests.

Table 11 reports the measurements taken with the TDT on floor 5, both in dry and wet conditions, using both the rubber and leather pads. The test was conducted on a 3.20 meter strip, for a total of 160 measurements.

**Table 11.** Average measurement values TDT vs BPT Floor 5.

| TDT (Dry flooring) | | TDT (Wet flooring) | | BPT (Dry flooring) | | BPT (Wet flooring) | |
|---|---|---|---|---|---|---|---|
| Nr Measures | 160 | Nr Measures | 160 | Section | BPN | Section | BPN |
| Rubber Pad (CoF) Value | 0.43 | Rubber Pad (CoF) Value | 0.52 | 1 Rubber Pad | 79 | 1 | 21 |
| Leather Pad (CoF) Value | 0.38 | Leather Pad (CoF) Value | 0.58 | 2 Rubber Pad | 63 | 2 | 24 |

In this type of flooring, its coefficient of friction using rubber pad is above the minimum safety value $\mu \geq 0.40$ and increases for both pads when the flooring is wet.

The values recorded from sections analyzed with theBPT, conducted in both dry and wet conditions using the rubber pad. Using the BPT, the SRV value is acceptable on dry floor but decreases when the floor is wet.

The conversion formula from the pendulum SRV value to the CoF, as reported in the scientific literature, was applied (see Table 12).

**Table 12.** CoF Calculation using Eq. 4.

| CoF dry condition | | | | CoF wet condition | | |
|---|---|---|---|---|---|---|
| | TDT (CoF) | BPT (BPN) | CoF Calculated | TDT (CoF) | BPT (BPN) | CoF Calculated |
| Section 1 | 0.41 | 79 | 0.94 | No data | No data | No data |
| Section 2 | 0.38 | 73 | 0.70 | No data | No data | No data |

Table 13 reports the measurements taken with the TDT on floor 6, both in dry and wet conditions, using both the rubber and leather pads. The test was conducted on a 3.00 meter strip, for a total of 162 measurements.

The CoF value is below the minimum threshold limit of 0.40 in the dry floor, meaning the flooring does not meet the minimum safety standards due to excessive slipperiness. On the wet floor, however, the CoF exceeds 0.40.

Table 14 shows the values recorded from sections analyzed with the BPT, conducted in both dry and wet conditions using the rubber pad.

**Table 13.** Average measurement values TDT vs BPT Floor 6.

| TDT (Dry flooring) | | TDT (Wet flooring) | | BPT (Dry flooring) | | BPT (Wet flooring) | |
|---|---|---|---|---|---|---|---|
| Nr Measures | 162 | Nr Measures | 162 | Section | BPN | Section | BPN |
| Rubber Pad (CoF) Value | 0.39 | Rubber Pad (CoF) Value | 0.49 | 1 Rubber Pad | 54 | 1 | 20 |
| Leather Pad (CoF) Value | 0.39 | Leather Pad (CoF) Value | 0.65 | 2 Rubber Pad | 44 | 2 | 20 |

**Table 14.** CoF Calculation using Eq. 4.

| CoF dry condition | | | | CoF wet condition | | |
|---|---|---|---|---|---|---|
| | TDT (CoF) | BPT (BPN) | CoF Calculated | TDT (CoF) | BPT (BPN) | CoF Calculated |
| Section 1 | 0.39 | 54 | 0.59 | 0.47 | 20 | 0.19 |
| Section 2 | 0.37 | 44 | 0.46 | 0.49 | 20 | 0.19 |

Based on an initial analysis, the CoF values measured with the TDT on dry floors are generally below the safety threshold of 0.40, indicating a high risk of slipperiness under dry conditions. In wet conditions, the threshold of 0.40 is exceeded, with the leather pad typically yielding higher CoF values than the rubber pad. The BPN values obtained using the BPT are acceptable on dry surfaces but show a marked decrease on wet floors, as expected, due to the reduced friction caused by the presence of water between the foot and the surface.

## 4 Discussion and Conclusions

In this study, six different types of pavements made from various materials were analyzed under both wet and dry conditions using the TDT and BPT testing devices. The data were first analyzed to verify whether the pavements met the Italian regulations and also to explore any potential correlation between the two methods.

In Italy, slip resistance measurement is based on the Tortus Digital Tribometer, following the BCRA method, regulated by D.M. 236/1989 and D.Lgs. 81/2008. This method has significant limitations, as the results do not always reflect the actual behavior of surfaces. In particular, the test depends on the low measurement speed (17 mm/s) and fails to reproduce phenomena such as aquaplaning. Internationally, many countries have abandoned the BCRA method in favour of the BPT or the inclined ramp test. These methods better represent the actual slip risk, especially in wet or contaminated conditions.

Other issues concern the test's sensitivity to surface contamination. The TDT does not provide reliable data on wet, dirty, or greasy surfaces, which are among the most

critical conditions for safety. Additionally, the method is affected by the compression of water between the test foot and the surface, a phenomenon that can distort measurements and produce unrealistically high friction values. This issue, known as "temporary adhesiveness," was observed in studies by Gronqvist et al. [13], which highlighted how the contact time of the pad on the surface could alter friction measurements. Lai et al. [14] confirmed that the dependence of adhesion force on contact time remains insufficiently understood and requires further investigation.

The analysis of the data obtained from the slip meter revealed some anomalies.

The values measured using the TDT on wet surfaces comply with standard DM 236/89, whereas on dry surfaces, only one type of flooring meets the minimum safety requirements. This phenomenon can be attributed to the suction cup effect and the inability to recreate aquaplaning due to the low speed of the instrument.

Measurements using the BCAR method show that graniglia, porcelain stoneware, and Orosei limestone floors do not meet the minimum safety level required by Italian standard DM 236/89, with a high risk of slipping on wet surfaces. The terracotta floor presents a moderate risk of slipping when wet.

The only flooring that complies with the BCAR standard is linoleum. However, like the others, it still presents a high risk of slipping in wet conditions, according to the BPT method. During the tests and measurements, discrepancies emerged concerning scientific principles, leading to the decision to increase the number of measurements under different usage conditions. Data analysis highlighted significant differences in the ability of the instruments to detect the slipperiness of the tested surfaces. The TDT in many cases measured higher values of CoF in wet conditions then in dry.

The BPT proved effective in distinguishing between dry and wet surfaces, providing significant data on friction variations among materials. Measurements of BPN confirmed a higher risk of slipping on wet floors.

The TDT, on the other hand, showed limitations in differentiating between dry and wet surfaces, with less reliable measurements compared to the BPT. The comparison of CoF values measured by the two instruments revealed a weak correlation, confirming that the results are not directly comparable and that each method has specific limitations.

Studies such as validation of walkway tribometers: establishing a reference standard [15] have confirmed that many tribometers do not always differentiate between flooring materials, especially in wet conditions, highlighting the same issues found in this research.

Finally, the BPT emerged as the most reliable method for distinguishing between safe and hazardous surfaces, while the TDT showed significant limitations in evaluating wet surfaces, reducing its effectiveness in real-world applications.

However, the study has certain limitations. The sample size of six pavement types, while representative, is relatively limited, and testing was conducted under controlled conditions that may not fully replicate the variability of real-world environments. Future studies should aim to increase the number and diversity of flooring samples, introduce more dynamic and realistic test conditions, and consider the inclusion of user-centered factors such as footwear type and gait patterns. Long-term, the adoption of more effective, standardized, and field-representative testing tools is essential to ensure accurate risk assessment and improved public safety in both private and public spaces. Finally it can be

said that testing and classification results highlight the critical need to standardize testing and classification methods, or to develop a conversion matrix that enables comparison across different measurement techniques [16].

**Author Contributions.** Concept and methodology, Rombi, J., Salis, M. and Coni, M.; experimental campaign and validation, Rombi, J., Salis, M., analysis, Rombi, J., Salis, M., Maltinti, F., Coni, M., and Rassu, N., writing, review and editing, Rombi, J., Salis, M., Maltinti, F., and Rassu, N., project administration, Coni, M., All authors have read and agreed to the published version of the manuscript.

**Disclosure of Interests..** The authors have no competing interests to declare that are relevant to the content of this article.

## References

1. Li, J., Goerlandt, F., Way Li, W.L.: Slip and fall incidents at work: a visual analytics analysis of the research domain. Int. J. Environ. Res. Publ. Heal. **16**(24), 4972 (2019)
2. UNI EN 16165, 2021, Determination of slip resistance of pedestrian surfaces - Methods of evaluation, Italian Organization for Standardization (U.N.I.)
3. UNI EN 13036-4, 2011, Road and airfield surface characteristics - Test methods - Part 4: Method for measurement of slip/skid resistance of a surface: The pendulum test, Italian Organization for Standardization (U.N.I.)
4. DIN 51131, 2008-08, Testing of floor coverings - Determination of the anti-slip property - Method for measurement of the sliding friction coefficient
5. BS 7976-2:2002+A1:2013, Pendulum testers - Method of operation
6. Italian Legislative Decree No. 236/1989: Provisions on the prevention of accidents in the workplace. Off. J. Ital. Repub. (1989)
7. Italian Legislative Decree No. 81/2008: Consolidated act on health and safety in the workplace. Off. J. Ital. Repub. (2008)
8. UNI 11583, 2015, Personal protective equipment - Safety, protection and occupational footwear for work on inclined roofs
9. Derler, S., Huber, R., Kausch, F., Meyer, V.R.: Effectiveness, durability and wear of anti-slip treatments for resilient floor coverings, vol. 76, pp. 12–20. Elsevier (2015)
10. Kim, I.J., Hsiao, H., Simeonov, P.: Functional levels of floor surface roughness for the prevention of slips and falls: Clean-and-dry and soapsuds-covered wet surfaces, vol. 44, pp. 58–64. Elsevier (2013)
11. Ricotti, R., Delucchi, M., Cerisola, G.: A comparison of results from portable and laboratory floor slipperiness testers. Int. J. Indus. Ergonom. **39**, 353–357 (2009)
12. Blake, D.M., Wilson, T.M., Cole, J.W., Deligne, N.I., Lindsay, J.M.: Impact of Volcanic Ash on Road and Airfield Surface Skid Resistance, Sustainability (2017)
13. Grönqvist, R., Hirvonen, M., Tohv, A.: Evaluation of three portable floor slipperiness testers. Int. J. Indus. Ergonom. **25**, 85–95 (2000)
14. Lai, T., Zhang, Y., Zhu, T.: Contact time dependence of adhesion force studied at low, moderate, and high relative humidities on AFM: Influence of surface hydrophilicity. Appl. Surf. Sci. **649** (2024)

15. Powers, C.M., Blanchette, M.G., Brault, J.R., Flynn, J., Siegmund, G.P.: Validation of walkway tribometers: establishing a reference standard. J. Foren. Sci. **55**, 366–370 (2010)
16. Sudol, E., et al.: Comparative Analysis of Slip Resistance Test Methods for Granite Floors, vol. 14. MDPI materials (2021)