Generating Local Rules in Fuzzy Rule-Based Classification Systems

Maroua Lejmi[1,2(✉)], Bertrand Cuissart[1], Ilef Ben Slima[3,4], Nida Meddouri[6], Jean-Luc Lamotte[1], and Amel Borgi[5]

[1] Université Caen Normandie, ENSICAEN, CNRS, Normandie Univ, GREYC UMR 6072, Caen 14000, France
lejmi.maroua@gmail.com
[2] Université de Tunis El Manar, Faculté des Sciences de Tunis, LIPAH, LR11ES14, 2092 Tunis, Tunisia
[3] ISMAIK, University of Kairouan, Kairouan 3100, Tunisia
[4] SM@RTS: Laboratory of Signals, Systems, Artificial Intelligence and Networks, Digital Research Center of Sfax, 3021 Sfax, Tunisia
[5] Université de Tunis El Manar, Institut Supérieur d'Informatique, Faculté des Sciences de Tunis, LIPAH, LR11ES14, 2092 Tunis, Tunisia
[6] Laboratoire de Recherche de L'EPITA, LRE, Le Kremlin-Bicêtre, Paris, France

Abstract. Fuzzy Rule-Based Classification Systems (FRBCS) have emerged as a powerful model in machine learning and decision-making, with its capability of handling imprecision and providing understandable models in diverse applications. The generated rules can sometimes be difficult to interpret in FRBCS, when dealing with a large number of rules. Additionally, a high number of attributes requires a larger set of rules to accurately model them which leads to an increased computational complexity. It is also crucial to consider the rules length and generate rules with short premises in order to improve the system's interpretability. Researchers use various techniques to reduce the number of attributes as well as the number of rules. Within this article we are interested in a technique based on attributes regrouping. We study a particular method called SIFRA, which we relied on to generate local fuzzy rules in the simple fuzzy grid with the aim of improving the system performance and maintaining its interpretability and explainability.

Keywords: Supervised learning · Fuzzy Rule-Based Classification Systems · Fuzzy rules · Attributes regrouping

1 Introduction

In this paper, we are interested in supervised learning, particularly in Rule-Based Classification Systems (FRBCS). Their effectiveness consists in their comprehensive models based on linguistic variables where rules can be explicitly formulated and easily interpreted [14]. A FRBCS provides additional flexibility than an

© The Author(s), under exclusive license to Springer Nature Switzerland AG 2025
O. Gervasi et al. (Eds.): ICCSA 2025, LNCS 15649, pp. 150–165, 2025.
https://doi.org/10.1007/978-3-031-96997-3_10

ordinary rule-based system by allowing gradual evaluations and handling uncertainty [3]. It should be noted that in Fuzzy Rule-Based classification Systems, all attributes are numerical. In FRBCS design, the number of fuzzy rules grows exponentially with the increase in the number of attributes. This makes the model computationally expensive, especially with high-dimensional data, which in turn results in a degraded interpretation [14]. To overcome this problem, various methods are employed beforehand. These methods involve techniques like attributes selection, rules extraction, rules induction, and attributes regrouping. The last technique can also play a role in reducing complexity by creating simpler models. The attributes regrouping technique in FRBCS, has been effectively applied by various approaches such as SIFCO [20], which uses linear correlation to detect related attributes that will be gathered together and used in fuzzy rules generation. SIFCO uses measures based on statistical concepts. However, there may be other types of linkage between variables that cannot be calculated by statistical measures. Thus, another attributes regrouping method in FRBCS, called SIFRA [4], was proposed to detect associations between both numerical and categorical variables. It consists of determining related groups of attributes based on an association rules concept, precisely the Frequent Itemsets Mining. It is used to calculate a coefficient called the association degree between attributes [11]. In this context, we are interested in the SIFRA approach. SIFRA was compared to the selection attributes method and rules selection approach [10,13]. The results in terms of classification rate have shown that SIFRA outperforms various state-of-the-art methods [4]. The attributes regrouping approach introduced in SIFRA offers a way to reduce the complexity of FRBCS by regrouping related attributes and generating fuzzy rules for each group of attributes separately. We focused on the determination of associated attributes step of this method because they introduced a captivating technique. It consists of determining frequent itemsets between attributes intervals to outline the linkage between these attributes. In this paper, we propose a new contribution for the generation of candidate fuzzy rules in FRBCS. It consists of finding interesting rules in the fuzzy grid inspired by the SIFRA proposed technique of searching linked attributes. We applied our method to some UCI classification datasets and the results reveal the feasibility of the proposed method.

This paper is organized as follows. In Sect. 2, we recall the basic concepts of FRBCS. In Sect. 3, we present some of state-of-the-art methods. In Sect. 4, the SIFRA method is briefly described. Section 5 is devoted to the introduction of the proposed contribution. Before concluding, we discuss in Sect. 6 the experimental results obtained by computer simulations using different datasets.

2 Fuzzy Rule-Based Classification Systems

FRBCS automatically generate a set of IF-THEN fuzzy rules from numerical data in the learning phase. The classification phase uses a reasoning method to classify new objects. Diverse rule generation methods in FRBCS have been proposed in the literature. Fuzzy decision trees have been used in rule-based learning to construct fuzzy rules from numerical data [21] in order to handle

situations where the decision is not binary but rather fuzzy. Neural networks offer another alternative for generating fuzzy rules [15,16]. An innovative contribution has been proposed to simplify real-world complex problems. It involves generating fuzzy rules in FRBCS and is based on a granular reduct. This approach is a type of consistency-preserving attribute reduction method aimed at finding a minimal attributes set while maintaining the predefined consistency level unchanged [17].

Another well-known method from the literature, which is of particular interest to us, is the simple fuzzy grid method [9]. It is one of the earliest methods proposed in this field. It generates the fuzzy rules using a fuzzy grid, which involves partitioning the input space into subspaces and constructing a rule for each subspace. Like all supervised methods, the system described in [9] consists of two main phases: a learning phase and a classification phase. They are detailed in the following sections.

2.1 Learning Phase

In the learning phase, we employ the simple fuzzy grid as in [9]. In fact, the simple fuzzy grid partition has been widely used in pattern recognition and fuzzy reasoning [4]. It is important to note that the notations presented in [9] are used in this section.

We consider a two-dimensional pattern classification problem with two numerical attributes: X_1 and X_2 with C classes and m given training patterns. Each pattern belongs to one of the C class labels $(y_1, y_2, \ldots, y_c)$. The extension of this approach to N attributes is straightforward. The first step is the fuzzy partitioning step where each of the attributes X_1 and X_2 is partitioned into k fuzzy subsets: $A_1^k, A_2^k, ..., A_k^k$ where each A_i^k subset is defined by a membership function. There are several membership functions in the literature such as triangular, trapezoidal and Gaussian functions [19]. In this study, we have employed the triangular membership function which is one of the most encountered in practice. After completing the fuzzy partitioning step, a simple fuzzy grid is obtained, as shown in Fig. 1 (with $k = 3$). The second step is the construction of the fuzzy rules. For each fuzzy subspace $A_i^k \times A_j^k$ of the fuzzy grid, a fuzzy rule labeled R_{ij}^k is generated, accompanied by its certainty factor (CF) as illustrated in equation (1). If a subspace does not contain instances, the algorithm does not allow a rule to be generated in this region. The conclusion and the certainty factor CF are determined as proposed in [9].

$$R_{ij}^k : \text{If } \; X_1 \; is \; A_i^k \text{ and } X_2 \; is \; A_j^k \text{ then } E = (X_1, X_2) \;\; \text{belongs to } y_{ij}^k \text{ with } CF = CF_{ij}^k \tag{1}$$

Where:

- R_{ij}^k: is the label of fuzzy If-then rules,
- k: is the number of fuzzy subsets for the two axes,
- A_i^k and A_j^k: are fuzzy subsets,
- y_{ij}^k: is the consequent (one of the C classes $\{y_1, y_2, ..., y_c\}$),

– CF_{ij}^k: is the certainty factor of the fuzzy if-then rule.

The conclusion and the certainty factor are determined as follows:

1. For each class y_t, the sum of the compatibility degrees of the training examples belonging to this class is calculated, with respect to the premise of the rule:

$$\beta y_t = \sum_{Y(E_p)=y_t} \mu_i^k(X_{1p}) * \mu_j^k(X_{2p}) \; ; \quad t = 1, 2, ..., C \tag{2}$$

where:
   – y_t: a class among the C classes $y_1, y_2, ..., y_c$
   – $E_p = (X_{1p}, X_{2p})$: a learning example,
   – Y(E_p): the associated class to the example E_p,
   – μ_i^k, μ_j^k: membership functions of A_i^k and A_j^k.
2. Find the class y_a that has the maximum value of βy_t; assign this class as the consequent of R_{ij}^k ($y_{ij}^k = y_a$).

$$\beta y_a = max\{\beta y_1, \beta y_2, ..., \beta y_c\} \tag{3}$$

3. CF_{ij}^k is determined as:

$$CF_{ij}^k = \frac{|\beta y_a - \beta|}{\sum_{t=1}^{C} \beta y_t} \qquad with \qquad \beta = \sum_{y_t \neq y_a} \frac{\beta y_t}{C-1} \tag{4}$$

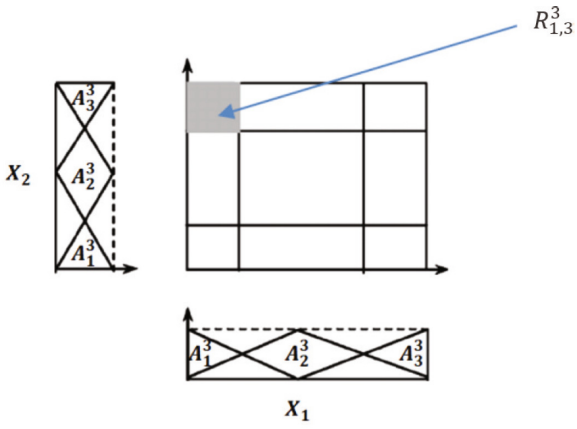

Fig. 1. A fuzzy grid with 2 attributes and 3 fuzzy subsets for each attribute [4]

2.2 Classification Phase

This phase consists of finding the class that will be associated to a new object. Several methods are used in FRBCS such the single winner rule method [9]. Other studies have used another classification method, called the Weighted Vote Method, which takes into account the votes of several rules that match the example to be classified [6,8]. In this work, we applied the single winner rule method. The class y_a that will be associated to a new pattern $E^{'} = (X_1^{'}, X_2^{'})$ using the previously generated rules set, denoted S_R, is determined as follows :

1. For each class $y_t, \quad t = 1, 2, \ldots, C$, calculate α_{y_t} as:

$$\alpha_{y_t} = max \left\{ \mu_i^k(X'_1) * \mu_j^k(X'_2) * CF_{ij}^k / \quad y_{ij}^k = y_t; R_{ij}^k \in S_R \right\} \tag{5}$$

2. Find class y_a which maximizes α_{y_t}:

$$\alpha_{y_a} = max \left\{ \alpha_{y_1}, \alpha_{y_2}, ..., \alpha_{y_C} \right\} \tag{6}$$

When two or more classes reach this maximum, the object cannot be classified.

3 Background

In this section, we present some methods from related work that were proposed in the context of fuzzy systems such as attributes selection, rules extraction and attributes regrouping. In [13], a method was proposed for fuzzy feature selection. This method selects the most relevant features capable of distinguishing between classes. It uses the membership degrees of positive and negative patterns in the fuzzy sets in order to compute the relevance of features to the classes. The generation of rules in fuzzy rule-based classifiers was done by using the selected features and their effective fuzzy sets. In [12], another approach was introduced, which proposes an iterative feature selection in fuzzy rule-based binary classifier. The algorithm presents an iterative framework for feature selection and then extracts fuzzy bicluster rules instead of deterministic rules. This helps retaining more useful information in the fuzzy rules and improving the performance. In [5], the authors employed a rules induction technique that combines rough set and fuzzy set theories to obtain a reduced set of interpretable rules with short premises. The technique of rules extraction was proposed in [18], based on an incremental feature selection process. The method begins by extracting an initial minimal set of attributes, referred to as a granular reduct. Then, it generates fuzzy rules based on the selected set of attributes. Additionally, the granular reduct and the fuzzy rules are incrementally updated as new objects are added. Contrarily to feature selection, attributes regrouping retains all attributes. However, the complexity is reduced by handling subsets of the original attributes where, each subset is a projection of the data into a lower dimensional subspace. In this context, a method called SIFCO was proposed in [20]. It is based on a linear correlation search. The SIFCO method gathers attributes that are correlated

into groups of attributes and treats each group independently. In [4], an approach called SIFRA was proposed, which simplifies the FRBCS by introducing a method for grouping attributes based on their associations. It detects several types of associations, not only linear correlation. In the following, we describe the SIFRA method, which served as an inspiration for our contribution.

4 SIFRA

SIFRA is a supervised learning method that offers an attributes regrouping technique to create groups of attributes. Then each group is used separately to construct a fuzzy rule base. Later, these bases are aggregated together to form the global rules base, which is used in the classification phase. The attributes regrouping approach was effectively used in FRBCSs by various methods notably SIFCO [20] which uses linear correlation to detect related attributes and SIFRA [4], which consists of determining related groups of attributes based on the Frequent Itemsets Mining concept of Association Rules (AR) [11]. The main objective of SIFRA is to reduce the complexity of FRBCS which are especially complex when treating a dataset with many attributes. The attributes regrouping approach used in SIFRA helps to decompose the searching space into smaller groups of attributes and treat each group separately. This choice is motivated by the effectiveness of ensemble methods [7] in improving predictive performance and enhancing interpretability by dividing complex problems into smaller, more manageable subproblems. SIFRA consists in 3 phases: the attributes regrouping phase, the learning phase, and the classification phase. We focus on the attributes regrouping phase, the following two phases are identical to those used in FRBCS as described in Sect. 2 [9]. The attributes regrouping method in SIFRA includes 3 main steps: mining frequent itemsets, detection of associated attributes, and selection of the final groups of attributes. We provide in the following subsections a description of each step in the attributes regrouping method. The interested reader can refer to the work [4] for more details on this approach.

4.1 Mining Frequent Itemsets

In order to search for frequent itemsets, a specific algorithm such as Apriori is used [1]. An itemset is considered frequent if its support value is greater than a predefined threshold named *minsupp*. The support refers to the frequency of occurrence of an itemset. In our context, attributes are numerical and an itemset is a set of attributes intervals. First, a discretization is used to split into intervals the numerical attributes and map them into boolean ones. Different types of discretization can be used [4]. In SIFRA, the Equal Width Interval (EWI), which divides the numerical range into intervals of equal size and ensures a uniform partitioning of the data space, was used. Apriori is later performed and frequent itemsets are obtained, where each frequent itemset represents a set of related intervals.

4.2 Detection of Associated Attributes

In order to detect the related attributes, the authors in [4] have proposed an association grid which highlights the associations between attributes intervals. When two intervals form a frequent itemset, the cell corresponding to their intersection represents a related region, colored in grey as shown in Fig. 2. Through these regions, we can determine the association between the attributes by computing an association degree β that takes into account the number of the linked regions as well as their density.

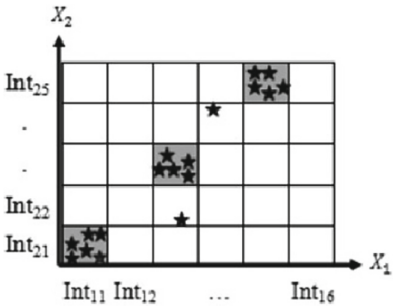

Fig. 2. An association grid example [4]

4.3 Selection of the Final Groups of Attributes

The final step is the selection of the final groups of attributes. A filtering step is used to select the most relevant groups, those with a high association degree β and a high cardinality [4]. After determining the associated groups of attributes, each group is treated independently by a FRBCS [9] as described in Sect. 2. The global rules base is then obtained by the union of the different rule bases and is denoted GR.

5 Proposed Contribution

Our contribution is based on the generation of fuzzy rules in the simple fuzzy grid. In classic FRBCS, when the fuzzy grid is employed, the number of the generated fuzzy rules is very high and increases with the increase of the number of attributes. For N attributes partitioned into k subsets, the number of rules is k^N. For example, if we consider a dataset with 12 attributes, each partitioned into 3 subsets, the number of generated rules is $3^{12} = 531441$. SIFRA reduces this problem by the attributes regrouping method. When the N attributes are

divided into groups, the number of rules NB_{rules} is calculated as follows:

$$NB_{rules} = \sum_{i=1}^{n} k^{N_i} \leq \prod_{i=1}^{n} k^{N_i} = k^{\sum_{i=1}^{n} N_i} = k^N \tag{7}$$

where:

- n is the number of groups of related attributes.
- the groups of attributes constitute a partition of the entire set of attributes ($\sum_{i=1}^{n} N_i = N$).
- N_i is the number of attributes for the group g_i.

For example, with SIFRA, if the 12 attributes are divided into 3 groups, the first with 6 attributes, the second with 4 attributes and the third with 2 attributes, then the number of rules generated is $3^6 + 3^4 + 3^2 = 819$ which is significantly lower than 531441. The SIFRA method overcomes the problem of the explosion in the number of fuzzy rules in FRBCS, but it may miss generating some interesting rules during the attributes regrouping phase. In fact, SIFRA takes into consideration the number of linked regions and their density as two factors in the detection of associated attributes. With this approach, not all the linked attributes are used to generate the fuzzy rules. More precisely, the linkage between two intervals of two attributes does not necessarily imply a linkage between the two attributes in SIFRA. This is because either these attributes can have very few linked regions, or the amount of data in these regions is significantly lower compared to the total amount of data. The case of very few linked regions is illustrated in the association grid AG2 in Fig. 3 where only one region is formed. By ignoring these attributes in the filtering step of SIFRA, some linked regions will be neglected, accordingly some attributes will not be considered together later while generating the fuzzy rules whereas potentially, these attributes might enhance the classification rate. So, there may be interesting rules that remain unexplored in SIFRA due to its attributes regrouping phase.

In our work, we aim to address the problem of a large number of fuzzy rules in classic FRBCS while maintaining good system classification performance. Unlike SIFRA, our contribution does not include an attributes regrouping step. In our contribution, instead of generating all the rules from each cell of the simple fuzzy grid, as described in Sect. 2 [9], we choose to select some cells based on the association between attributes intervals. The process consists of searching frequent intervals of attributes imitating the Mining Frequent itemsets technique that was proposed in the SIFRA method. SIFRA presents this step to determine the associated attributes and regrouping them based on this association. On the other hand, we employ it to search for related intervals between attributes in the fuzzy grid for the purpose of generating fuzzy rules in some specific and interesting regions in the grid which reduces the number of fuzzy rules obtained by the FRBCS. This approach may generate fuzzy rules not generated by SIFRA.

Our method begins by applying a discretization step to split the numerical attributes into intervals and then detects those that are related through the algorithm of frequent itemsets mining, Apriori, as SIFRA (Sect. 4). When a set of intervals is determined to be frequent by Apriori, their corresponding intersection is then considered as related. Our contribution focuses on choosing these related intervals in the simple fuzzy grid in order to generate a local fuzzy rule in each of the related cells. Our method implies two solutions as shown in Fig. 3. In the first solution, we begin by determining the linked regions between attributes using the association grid. Once these regions are detected, we do not apply the regrouping phase as SIFRA, we only take into account the related regions and we generate a fuzzy rule in each of them exclusively as demonstrated in the left side grids of Fig. 3 (a rule is generated in each greyed-out cell). This allows us to take into account the regions that could have been neglected in the SIFRA method and lost during the selection step. The obtained rule base is called : the Local Rules base denoted LR. An excerpt of local rules and those generated by SIFRA is provided in the appendix A to highlight the differences between the two approaches. Since some fuzzy rules obtained by our first solution do not appear in the SIFRA method and vice versa, we proposed a second solution where GR (the Global Rules base generated by SIFRA) and LR are combined to enrich each other. We denoted this rules base CR (Combined Rules base). Figure 3 represents the two solutions, additionally the SIFRA process to effectively illustrate the proposed ideas.

In order to clarify the method, consider two association grids that illustrate the related regions between attributes as shown in the example in Fig. 3. For a simpler explanation, we present two-dimensional grids. However, these grids can be multidimensional depending on the number of attributes. The grid AG1 represents the association between X_1 and X_2, and the second grid AG2 illustrates the association between X_4 and X_5. While generating the Local Rules Base (LR), we consider only the related regions, i.e., regions that surpass the support threshold while applying Apriori. Consequently, a fuzzy grid with the same size as each association grid is generated and fuzzy rules are then constructed. In this example (Fig. 3), three fuzzy rules are derived from the first fuzzy grid and only one fuzzy rule is generated in the second fuzzy grid since the two other regions containing examples (Int4,4 x Int5,4) and (Int4,1 x Int5,1) do not form linked regions. As explained in the previous section, the generation of the Global Rules Base (GR) of SIFRA is preceded by a regrouping attributes step which requires a minimum association between the attributes in order to form groups of attributes. In this example, the attributes X_1 and X_2 are considered associated and form a group of attributes. However, X_4 and X_5 have only one linked region so they are not associated and AG2 is not considered in SIFRA. In this case, one fuzzy grid is generated for X_1 and X_2, and fuzzy rules are derived from all grid cells including related and unrelated regions (see FG1 in Fig. 3).

For attributes partitioning, we employ the Equal Width Interval (EWI) and Equal Frequency Interval (EFI) discretization methods. EWI, which was already

used and tested in SIFRA, does not account for data distribution, which may lead to intervals with sparse or unrepresentative data. To address this limitation, we propose the use of EFI in addition, which divides the variation domain of the attribute into a predefined number of intervals so that each interval contains approximately the same number of data points. This ensures that all intervals have a sufficient amount of data, making them more suitable for frequent itemsets mining by avoiding intervals with low support. The applied discretization methods are parametric and require a predefined number of intervals k, set by the user. There are methods that do not use a pre-determined parameter, such as supervised discretization methods [2]. They consider the class information and seek to select the intervals that best discriminate the class, unlike unsupervised discretization methods that divide attributes into a specific number of intervals, regardless of their discriminating capacity. We aim to use supervised techniques as perspective.

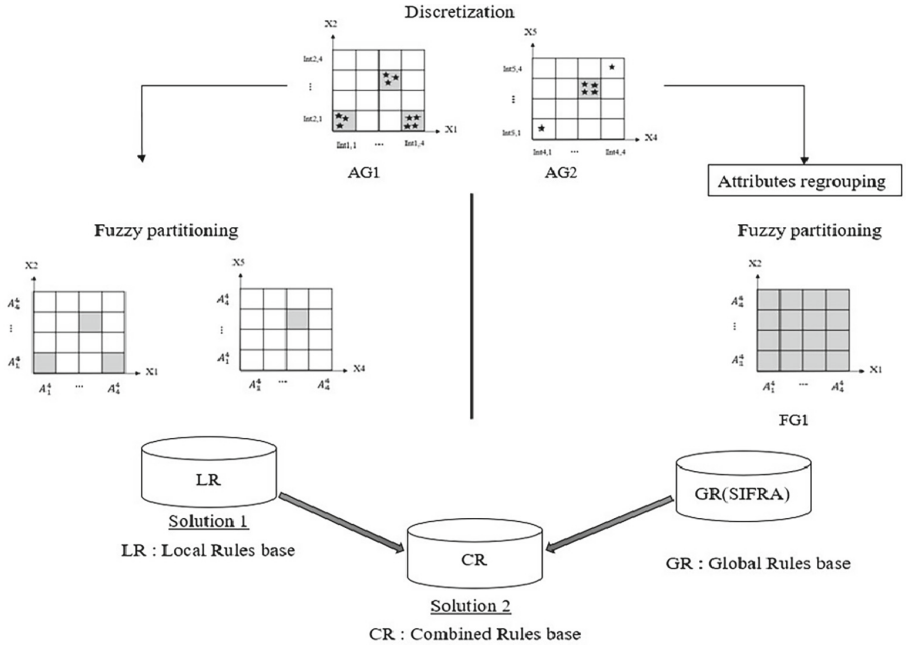

Fig. 3. Schematic representation of the proposed method

6 Experimentation and Test Results

Our contribution was implemented using the library from the WEKA 2 platform[1]. The data structures from WEKA were also adopted. Additionally, we

[1] https://ml.cms.waikato.ac.nz/weka/.

relied on the SIFRA system. We used a part of the code (specifically for frequent itemset generation with Apriori and the classification phase). During the learning phase, we integrated our own code to modify the rules generation phase. We conducted experiments with 7 databases from UCI[2] described in Table 1.We chose these databases because they have different sizes and a different number of classes. We recall that in the context of FRBCS, all attributes are numerical.

Table 1. Databases used in the experimentations.

Database	Number of instances	Number of attributes	Number of classes
Iris	150	4	3
Diabetes	768	8	2
Glass	214	9	7
Ecoli	336	7	8
Wine	178	13	3
Heart-statlog	270	13	2
Vehicle	846	18	4

For the experiments, we have three parameters that should be set: the discretization and the minimum support *minsupp* used for the application of Apriori and the discretization used in the fuzzy partitioning in the learning phase of the FRBCS. These parameters were set empirically and a complementary study will be conducted in the future to examine the impact of the parameters on the results. While determining the thresholds of different parameters, we noted from the tests that the choice of appropriate values is highly data-dependent. For this reason, we tested several values of these parameters and choose the best results obtained for each database. As a reminder, in our contribution, the discretization and the number of intervals used for Apriori have to be the same used in the fuzzy partitioning as explained in Sect. 5. We tested two types of discretization: Equal Width Interval (EWI) and Equal Frequency Interval (EFI) with different number of intervals. We used EFI for all tested databases except Iris. In general, EFI gives better results since it divides the attributes according to frequency, which ensures that the regions between the attributes contain data. EWI is not very effective because, when dividing by intervals, some regions contain no data, while some intervals are densely populated, and others have only few instances. However, in Iris, when the attributes are divided into 3 partitions, the intervals are more dense. In Table 2, we present the different thresholds set for each parameter: *minsupp*, the type of discretization, and the number of intervals k. These values were used in all methods, namely LR (Local Rules Base), CR (Combined Rules base), and GR (the Global Rules base generated by SIFRA).

[2] https://archive.ics.uci.edu/datasets.

Table 2. Tested parameters.

Database	*minsupp*	Discretization	k
Iris	0.1	EWI	3
Diabetes	0.2	EFI	4
Glass			
Ecoli			
Wine			
Heart-statlog			
Vehicle			

Table 3. Experimental results

Database	LR		CR		GR (SIFRA)	
	Classification rate %	Number of rules	Classification rate %	Number of rules	Classification rate %	Number of rules
Iris	90.6	33	**91.3**	39	84.6	14
Diabetes	**72.5**	25	71.74	32	70.7	34
Glass	**50.4**	35	48.13	45	44.85	33
Ecoli	63.09	54	**66.36**	60	62.5	20
Wine	**86.51**	46	86.51	51	84.8	50
Heart-statlog	**67.4**	138	67.4	158	58.8	41
Vehicle	43.02	168	42.9	179	**45.70**	70

In order to provide a comprehensive evaluation and comparison of our method, we choose the Classification Rate and the Number of Rules as indicators. For the evaluation, we used the tenfold crossvalidation technique.
The outcomes obtained from our proposed solutions and the SIFRA approach are given in Table 3. In general, our two approaches give better results than SIFRA for six datasets among the seven tested. Our proposed Local Rules Base (LR) consistently outperforms the Global Rules Base (GR) for Iris, Diabetes, Ecoli, Glass, Wine and Heart-statlog in terms of classification rate. This amelioration is due to the fact that LR contains rules that do not exist in GR (they were not generated in SIFRA), which proves that these rules can be more effective and contribute well to the classification. Better results are given with the Combined Rules Base (CR) for Iris and Ecoli. In these two databases, LR has higher classification rate than GR, however when their rules are combined the results are improved, which demonstrates that the local fuzzy rules can enhance the classification of the global system. Also the two rule sets have interesting rules that complement each other when performed together. Moreover, this reflects that some of the rules in LR have a better quality than GR since CR chooses rules from both LR and GR for the classification. SIFRA outperforms LR and CR for Vehicle which is a dataset with higher number of attributes. We note that our method performs better on small databases. However, our contribution

LR generates a higher number of rules than SIFRA with five databases. This is due to the fact that we extract more rules in the fuzzy grid without regrouping the attributes. Concerning the rules length, our local rules have shorter premises then the SIFRA rules because they do not cover all attributes intervals. Overall, CR has higher number of rules because it combines rules from LR and GR. SIFRA has been compared with other state-of-the-art methods. It presents better results for classification rates in most cases compared to FRBCS. It also showed good performance when compared to ensemble methods [4].

7 Conclusion

We provide in this work a new method to improve the generation of fuzzy rules in a FRBCS inspired by the SIFRA method, which implies an approach of regrouping attributes based on the associations between their intervals. We proposed a generation of local fuzzy rules in the simple fuzzy grid extracted from the related intervals of attributes. Our contribution demonstrates a significant improvement in classification rates across most of the tested databases with an appropriate number of rules. In future work, we plan to reduce the number of rules and, more generally, to carry out an in-depth analysis to detect the most relevant ones. We also propose to perform tests with more high-dimensional databases and make more comparisons with recent methods and other methods that have been compared with SIFRA [4]. Thus, it could be interesting to combine feature selection methods with our approach in the pre-treatment phase.

Acknowledgments. This work has been achieved thanks to the financial support of PHC UTIQUE 2022 “Paprica”, project number 22G1405 (partnership of the French Ministry of Europe and Foreign Affairs and the Tunisian Ministry of Higher Education and Scientific Research)

A Appendix: Global and Local Rules

To highlight the difference between the global rules generated by SIFRA and the local rules, we present the results of the SIFRA rules in comparison with those generated by our proposed method. This is illustrated through the example of the Iris database. The four attributes of this data set, namely SepalLength, SepalWidth, PetalLength, and PetalWidth, are displayed with their respective indices: 0, 1, 2, and 3. In this test, each attribute is partitioned into three intervals. Class labels, namely Iris-setosa, Iris-versicolor, and Iris-virginica, are denoted by their indices 0, 1, and 2.

A.1 Global Rules (GR)

Global rules (GR) are the fuzzy rules generated by the SIFRA method, after a regrouping attributes phase. As input, the method receives all the attributes and identifies those that have significant associations. Then, during the selection

phase, it retains the related groups that exceed a minimum association threshold, as explained in Sect. 4. In the example below of Fig. 4, we present the related groups followed by the global rules. Two related groups were identified, where each group has two associated attributes. The first group, (0, 2), consists of attribute 0 and attribute 2, which are highlighted in red. The second group, (1,3), contains attribute 1 and attribute 3, which are highlighted in green. During the fuzzy rules generation step, only rules involving attribute pairs (0, 2) and (1, 3) were generated.

A fuzzy rule is represented as follows: [[0, 1], [2, 1], 0, 0.9557560104405949], where each pair in square brackets corresponds to an attribute and its associated interval, for example, [0, 1] denotes attribute 0 with interval 1, and [2, 1] denotes attribute 2 with interval 1. The third element (0) indicates the class label, and the final value (0.9557560104405949) represents the rule's certainty factor (CF).

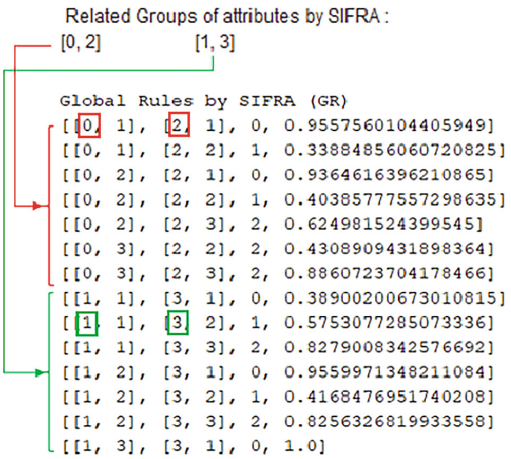

Fig. 4. Global rules generated with Iris dataset

A.2 Local Rules (LR)

Local rules are generated in our method by taking into consideration the frequent intervals between attributes. Once an attribute contains a frequent interval, a rule is generated using that interval. If two intervals belonging to two different attributes are detected as associated and frequent (frequently occurring together), a rule is created for the region combining both attributes with their respective intervals, and so on. For example, in Fig 5, attribute 0 is frequent in two intervals 1 and 2, so a rule is generated with each interval (rules framed in orange). Only one rule can be detected between the attributes 0 and 3 because they only have one intersection considered frequent, which is between the first interval of each of these attributes: [0, 1], [3, 1] (the rule framed in red in Fig 5).

As a result, many combinations between multiple attributes can be formed, though not across all their intervals, as shown by Fig 5. Only the linked regions between attributes identified as frequent are considered. This is the key difference between our rules and those generated by SIFRA.

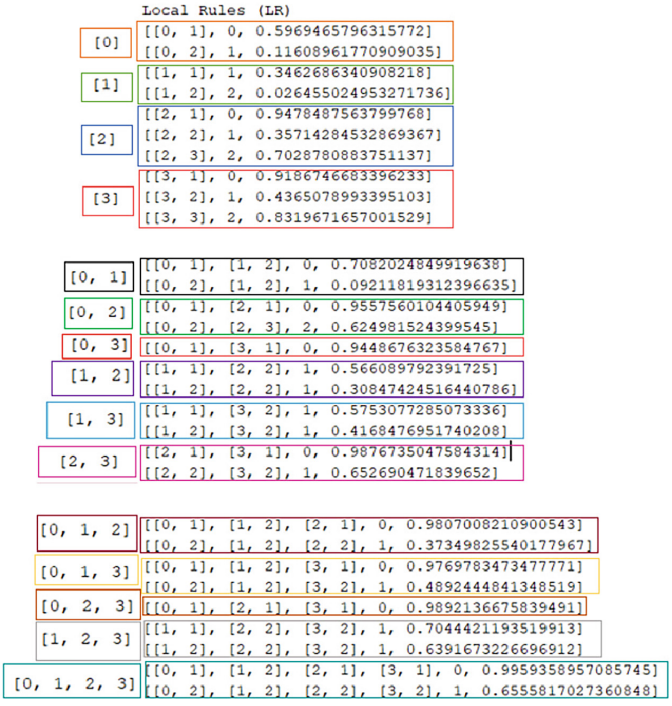

Fig. 5. Local rules generated with Iris dataset

References

1. Agrawal, R., Srikant, R.: Fast algorithms for mining association rules. In: Proceedings of the 20th International Conference Very Large Data Bases, VLDB, vol. 1215, pp. 487–499. Santiago, Chile (1994)
2. Aristodimou, A., Diavastos, A., Pattichis, C.S.: A fast supervised density-based discretization algorithm for classification tasks in the medical domain. Health Inform. J. **28**(1), 14604582211065396 (2022)
3. Bardossy, A., Duckstein, L.: Fuzzy Rule-Based Modeling with Applications to Geophysical. CRC Press, Biological and Engineering Systems (2022)
4. Ben Slima, I., Borgi, A.: Supervised methods for regrouping attributes in fuzzy rule-based classification systems. Appl. Intell. **48**(12), 4577–4593 (2018). https://doi.org/10.1007/s10489-018-1224-0

5. Bollaert, H., Palangetić, M., Cornelis, C., Greco, S., Słowiński, R.: FRRI: a novel algorithm for fuzzy-rough rule induction. Inf. Sci. **686**, 121362 (2025)
6. Cordón, O., Del Jesus, M.J., Herrera, F.: A proposal on reasoning methods in fuzzy rule-based classification systems. Int. J. Approx. Reason. **20**(1), 21–45 (1999)
7. Dietterich, T.G.: Ensemble methods in machine learning. In: Multiple Classifier Systems, pp. 1–15. Lecture Notes in Computer Science, Springer, Berlin, Heidelberg (2000)
8. Ishibuchi, H., Nakashima, T., Morisawa, T.: Voting in fuzzy rule-based systems for pattern classification problems. Fuzzy Sets Syst. **103**(2), 223–238 (1999)
9. Ishibuchi, H., Nozaki, K., Tanaka, H.: Distributed representation of fuzzy rules and its application to pattern classification. Fuzzy Sets Syst. **52**(1), 21–32 (1992)
10. Ishibuchi, H., Yamamoto, T.: Rule weight specification in fuzzy rule-based classification systems. IEEE Trans. Fuzzy Syst. **13**(4), 428–435 (2005)
11. Lejmi, M., Ben Slima, I., Borgi, A.: Attributes regrouping by genetic algorithm in fuzzy inference systems. Proc. Comput. Sci. **207**, 1037–1046 (2022)
12. Li, H., Wang, C., Huang, Q.: Employing iterative feature selection in fuzzy rule-based binary classification. IEEE Transactions on Fuzzy Systems (2024)
13. Mansoori, E.G., Shafiee, K.S.: On fuzzy feature selection in designing fuzzy classifiers for high-dimensional data. Evol. Syst. **7**, 255–265 (2016)
14. Marbun, M., Sitompul, O.S., Nababan, E.B., Sihombing, P.: Framework for Optimizing The Performance of Fuzzy Grid Partition for Rules Generation. In: 2022 IEEE International Conference of Computer Science and Information Technology (ICOSNIKOM), pp. 1–7. IEEE, Laguboti, North Sumatra, Indonesia (Oct 2022)
15. Mazieres, A.: Cartographie de l'apprentissage artificiel et de ses algorithmes. Université Paris Diderot, Manuscrit de thèse (2016)
16. Mitra, S., Hayashi, Y.: Neuro-fuzzy rule generation: survey in soft computing framework. IEEE Trans. Neural Netw. **11**(3), 748–768 (May 2000). https://doi.org/10.1109/72.846746, conference Name: IEEE Transactions on Neural Networks
17. Niu, J., Chen, D., Li, J., Wang, H.: Fuzzy rule-based classification method for incremental rule learning. IEEE Trans. Fuzzy Syst. **30**(9), 3748–3761 (2021)
18. Niu, J., Chen, D., Li, J., Wang, H.: Fuzzy rule-based classification method for incremental rule learning. IEEE Trans. Fuzzy Syst. **30**(9), 3748–3761 (2022). https://doi.org/10.1109/TFUZZ.2021.3128061
19. Sadollah, A.: Introductory chapter: which membership function is appropriate in fuzzy system? In: Fuzzy Logic Based in Optimization Methods and Control Systems and Its Applications. IntechOpen (Oct 2018)
20. Soua, B., Borgi, A., Tagina, M.: An ensemble method for fuzzy rule-based classification systems. Knowl. Inf. Syst. **36**(2), 385–410 (2013)
21. Wang, X., Liu, X., Pedrycz, W., Zhang, L.: Fuzzy rule based decision trees. Pattern Recogn. **48**(1), 50–59 (2015)