

Evaluating LoRaMesh Communication for Industrial IoT Applications: Performance and Feasibility

Mohamad Sadeque Abou Ali(✉), Jean Mário Moreira de Lima, Itamir de Morais Barroca Filho, and Andre Morais Gurgel

Digital Metropolis Institute - UFRN, Natal, Brazil
mohamad.ali@ufrn.edu.bn

Abstract. The Internet of Things (IoT) is continuously evolving, driving innovations in communication technologies, particularly for industrial applications where reliable long-range connectivity is essential. This work proposes a LoRa-based mesh network (LoRaMesh) for IoT applications, evaluating its effectiveness in expanding communication range and network resilience. Using an ESP32 microcontroller interfaced with a LoRaMesh module from Radioenge, the study explores various configurations of spreading factor (SF), bandwidth (BW), and coding rate (CR) to optimize communication performance. Experiments were conducted over distances of up to 1000 m, transmitting messages between two devices and analyzing signal strength (RSSI) and signal-to-noise ratio (SNR). At another point, a study was conducted regarding the power consumption of the devices used in different operating modes and the impact on the autonomy of a 3800 mAh battery powering the system. The results highlight the trade-offs between transmission range, data rate, and energy efficiency, providing insights into LoRaMesh's potential for industrial monitoring applications. Additionally, the study discusses necessary adaptations to ensure compatibility with industrial environments, including integration with established automation protocols. The findings contribute to the growing body of research on LoRa-based networks, offering practical considerations for deploying IoT solutions in remote and challenging conditions.

Keywords: LoRa · Mesh · Internet of Things

1 Introduction

Industrial environments are often located far from urban areas, which can make process monitoring challenging. This is the case for onshore oil wells, where, in the absence of a communication infrastructure, workers must personally check the status of equipment. This not only causes delays in response time but also results in high costs, weak signals, and a lack of redundancy in commonly used communication technologies. In such scenarios, communication alternatives

© The Author(s), under exclusive license to Springer Nature Switzerland AG 2025
O. Gervasi et al. (Eds.): ICCSA 2025, LNCS 15648, pp. 225–240, 2025.
https://doi.org/10.1007/978-3-031-97000-9_14

range from fiber optic cable deployment to radio communication or cellular signals. Each of these options has its advantages and disadvantages, but the lack of interoperability among them necessitates the use of different equipment.

Within the Internet of Things (IoT) paradigm, solutions to this problem can be found, enabling the connection of objects through wired and wireless networks, thus forming large systems for monitoring, analysis, and control [22]. Remote equipment monitoring through IoT is already a well-known challenge with various solutions depending on the specific case. LoRa is one of the technologies frequently cited in embedded systems research for this type of application, demonstrating good results due to its low power consumption and versatility. It can be implemented in different ways, either as a standalone physical layer or using protocols such as LoRaWAN and LoRaMesh, making it essential to understand the limitations, advantages, and disadvantages of each approach. There are several studies in the field of sensor network monitoring. Somchai Biansoongnern [4] aimed to use vibration sensors connected via WiFi to provide alerts about landslides. His architecture consists of sensors connecting to a main node that transmits the data to the internet, forming a star topology. This limits the network's range due to the dependence on the main node, but a positive aspect is the low implementation cost of the technology and the high communication speed. Addressing an urban problem, Vivek Katiyar [9] proposed the use of wireless sensor networks to collect traffic information and prevent accidents. His architecture utilizes Bluetooth technology for vehicle-to-vehicle communication, forming ad-hoc networks to share data obtained from sensors installed in strategic locations. Simulations showed that vehicle communication was possible at speeds of up to 60 km/h and distances of up to 20 m. This architecture has the advantage of using a widely available technology already embedded in many vehicles, reducing costs and ensuring communication stability. However, a limitation of this approach is the short range of Bluetooth, which may restrict its applicability in scenarios with high traffic density or higher speeds.

The versatility of these solutions allows for the hybrid application of multiple technologies. For example, Singh [19] developed a sensor network using LoRa and Zigbee to monitor oil pipelines, collecting pressure and flow data and sending them to the Cayenne platform, Despite the increased complexity of multiple networks, the gain in distance and system scalability can be highly beneficial. On the other hand, these technologies require a higher investment compared to Bluetooth or WiFi. Another study following the same principle was conducted by Fernández-Ahumada [7], who proposed a network for monitoring and operating an automatic irrigation system using LoRa and Sigfox. In this solution, multiple network nodes send data to a local gateway via LoRa, which then forwards the information to the ThingSpeak platform using Sigfox, The architecture that combines LoRa and Sigfox allows for a noticeable gain in communication range, as it leverages both Sigfox's infrastructure and LoRa's flexibility. However, detailed planning of deployment and maintenance costs is essential, considering that Sigfox operates under a subscription model to maintain connectivity, while LoRa may require initial infrastructure investments. The choice between these tech-

nologies should take into account coverage, data volume, and long-term economic feasibility.

Based on the analysis of some studies in the field and the search for a solution for a network that requires long-range communication, a low data rate, and minimal changes to the existing infrastructure of the monitored processes. This work aims to develop a device capable of communicating with industrial equipment using protocols already employed in the field, such as Modbus, and acquiring information from the environment in which it is installed through signals connected to digital and analog inputs. The collected data will be transmitted via a hybrid network, using a mesh topology with LoRa modulation to transport the data to local gateways that can share the information with other systems. Thus, it will be designed to offer greater coverage, cost reduction, and increased robustness. During the development, a validation of the chosen technologies will be carried out, ensuring that the defined requirements are met and enabling their implementation in future work.

2 Literature Review

2.1 Industrial Internet of Things

The paradigm of Internet-connected objects with the ability to send and receive data to perform specific tasks is called the Internet of Things (IoT) [11]. These objects, also referred to as devices, can be categorized into four layers, according to Oproiu [12]. The first layer is Perception, which operates at the lowest level, interacting with the physical and logical signals of the environment. Above it, there is the communication layer, which transmits the information collected and processed in the perception layer to the gateway, which acts as the boundary point with the object called the IoT device. Then, there is the middleware layer, a set of hardware and software that interface between the gateway and the application layer. Finally, the application layer, responsible for direct user interaction, enabling the operation of devices and services.

With the advancement of technology, the concept of the Internet of Things has been expanding and is often subdivided to facilitate understanding. One way to subdivide IoT is into Industrial and Consumer [2], the latter being aimed at personal use applications, such as smartwatches, voice assistants, smart home devices, and others. Industrial IoT may have identical functionalities to Consumer IoT, but it differs in characteristics such as environment, scale, device requirements, and connectivity.

In the production of industrial IoT devices, it is essential to consider connectivity, long-distance data transmission, low power consumption, and security, which help define the communication technology. In the case of short-range communications, Bluetooth and ZigBee have been widely used. When it comes to long distances, cellular communication technologies can reach great distances but also have high energy consumption and high costs with operators. For this reason, Low Power Wide Area (LP-WAN) technology was invented, networks capable of communicating from 10 to 40 km in rural areas and 1 to 5 km in

urban areas, but with low cost and power consumption. In this group of LP-WAN, the most prominent over the years have been LoRa, LoRaWAN, Sigfox, and NB-IoT.

2.2 LoRa

LoRa is a radio modulation technology that uses Chirp Spread Spectrum (CSS), communicates at a maximum speed of 50 kbps, and can carry up to 243 bytes. From LoRa came LoRaWAN, which is the communication protocol. In LoRaWAN, messages are forwarded to multiple base stations within network reach and arrive at a gateway in a star topology, although these stations increase deployment costs. Another technology is Sigfox, which provides an end-to-end connection through proprietary Sigfox stations, using binary phase-shift keying (BPSK) modulation in an unlicensed frequency, like LoRa, but capable of communicating at a rate of up to 200 kbps. Finally, NB-IoT uses a licensed frequency and operates with narrow-band radio technology [1].

During the previously mentioned stages, one topic that must always be considered is security. The significant increase in the number of devices and LP-WAN network alternatives has also created more opportunities for attackers to interfere in IoT networks. In the industrial environment, this is an even greater concern, as the security of data collection, storage, and distribution can have serious consequences in the event of failure. Security in IoT devices is a challenge due to limitations in memory, processing, and low power, as well as often being installed in environments with low supervision. Since LoRa packets stay in the air longer, they are more vulnerable to malicious attacks at the physical and data link layers, such as Denial of Service (DoS), jamming, eavesdropping, and replay assaults. Some alternatives to counter these attacks include using unique identification for nodes and authentication between parties, as is the case with LoRa, which uses AES algorithms for end-to-end encryption up to the application server [21].

Based on the discussed characteristics and considering the requirements of the industrial environment, LoRa was identified as the most suitable technology for this work. LoRa requires some parameters to be configured to achieve different results in various scenarios. One of these parameters is Bandwidth (BW), which defines the occupied frequency range. Another parameter is Spread Factor (SF), which affects the transmission time of a symbol. This factor influences the frequency variation rate in modulation; its increase results in greater sensitivity to signal reception but decreases the data transmission rate in bits per second. Another parameter is Coding Rate (CR), which determines the size of the Cyclic Redundancy Check (CRC), an error correction code that helps fix source errors but reduces the bit output rate.

In addition to configurable parameters, regional parameters must be considered, which are regulatory agency determinations related to allocated frequencies, transmission power, duty cycles, and other characteristics [3].

2.3 Topology of Network

Topology refers to how the network of devices is organized. The most common is the star topology, where data always flows through a central coordinator. Another alternative is the mesh topology, where data propagates between network nodes until it reaches the destination. The advantage of the mesh topology is its "self-healing" capability, allowing the network to automatically reconfigure itself in case of failure of one or more nodes. However, its disadvantage is increased complexity and higher energy consumption [16].

For this work, the chosen topology was mesh, due to its advantages in scenarios requiring greater coverage and resilience. This architecture was studied by Lee [10], who implemented a network with the Nuvoton Nano100LE3BN, consisting of nineteen devices in an 800 x 600 m area. Another application of this architecture is through the Meshtastic protocol, which configures devices to retransmit received messages and form a large network. This implementation enables pairing with a phone, allowing people to exchange messages through the network. One of the great achievements of this protocol was establishing communication over a distance of 331 km [5].

3 Methodology

The scope of this work involves the development of an embedded system device that must meet several functional requirements. It should be easily configurable since its network parameters, alarms, and other details may vary for each node in the sensor network, so it must include a mode for parameterizing the device. Another requirement is that it should interact with the environment in various ways, whether through digital and analog signals or by communicating with other devices. An important aspect is that it must be able to operate on battery power, as there may be cases where external power is limited or where it is necessary to notify a power failure, so the device must have autonomy in such scenarios. Additionally, the goal is to develop a LoRa communication device based on a mesh topology, meaning that this technology must be available in the device.

Based on these requirements, the definition of the device's components will be carried out through a careful selection of hardware, considering factors such as performance, energy consumption, compatibility, and cost.

The microcontroller will be one of the key elements, as it will be responsible for programming the device, enabling interaction with the environment and communication with the sensor network. Additionally, a LoRa communication module compatible with the mesh topology will be selected, allowing the microcontroller greater flexibility to perform other functions beyond network management.

Finally, the power source and necessary peripherals will be chosen to ensure compliance with the established functionalities.

After the selection of materials and the development of the prototype, the system will undergo a noise sensitivity test based on the distance between the nodes. The results of this test can help understand how the device behaves in

an industrial environment, as these locations often have large distances between equipment and high levels of electromagnetic interference due to the presence of motors, frequency inverters, and other electrical devices. Additionally, an evaluation of the system's energy consumption will be conducted to assess battery life and, finally, its applicability in an industrial environment, this discussion is important to understand how each feature of this device can be used to solve a real-world problem. The results obtained will enable adjustments and optimizations in the design, ensuring that the embedded system meets the defined requirements.

3.1 Hardware and Software

For communication, the LoRaMESH EndDevice module (Fig. 1) from the company Radioenge was chosen. This transceiver operates in the 915 MHz ISM Band, can function in LoRa or FSK modulation, and features a UART interface through which network communication and node configuration can be performed following the Radioenge LoRaMESH protocol. This can also be done using the software provided by the company, which can be used to configure the device connected via USB and an FTDI, or remotely configure any device on the network that has already been set up. Configuration parameters such as address and bit rate specifications can be modified. The module operates with the AES128 encryption algorithm [14]. The modules will be tested with 5dBi antennas. The LoRaMESH module can operate in two modes, defined as classes. In Class C, it participates in the mesh network, routing packets from other nodes. The other mode is Class A, where the device activates low power consumption and only responds to UART commands, enabling data reception for a time window to receive a response from the network master. The module also provides eight general-purpose pins, with 2 configurable as analog inputs with 12-bit resolution.

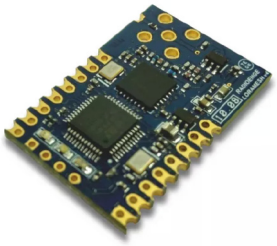

Fig. 1. LoRaMESH module from Radioenge

The reason for choosing this module is the agility in development, as it already comes with software for configuration, a library for use with microcontrollers from Arduino and Espressif, and it is certified by the Brazilian National Telecommunications Agency, Anatel.

The microcontroller chosen to interface with the communication module was the ESP32-S3-WROOM-1, mounted on the ESP32-S3-DevKitC-1 development board (Fig. 2). This board features an Xtensa dual-core 32-bit LX7 processor with a 240 MHz clock speed. The dual-core architecture and high clock rate provide the flexibility to handle multiple tasks simultaneously.

The hardware also includes Wi-Fi and Bluetooth LE interfaces, which enable the LoRa sensor network to connect with other systems. In addition to storing the firmware, the 16 MB flash memory allows saving configuration parameters, event logs, and other relevant data.

For interfacing with the environment, the board offers 36 general-purpose pins, as well as digital and analog signals. Some of these pins support communication through various protocols, such as RS485, CAN, SPI, and others. This enables new equipment and sensors to be attached to the device, allowing the acquisition of different types of data [6].

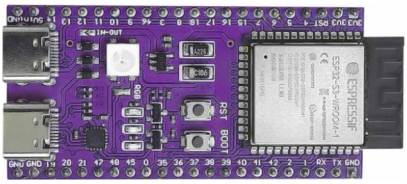

Fig. 2. Board ESP32-S3-Devkitc-1

3.2 Circuit

In the circuit used for each node (Fig. 3), a digital input for configuration was connected to GPIO 4 of the ESP32. A connection was made to the TX pin of the UART from the LoRaMESH module, which, when operating in Class C, runs at 5 V. This could potentially damage the UART circuit of the ESP32. Additionally, the TP4056 module was used to enable the system to operate with a 3.7 V Lithium battery with a 3800 mAh capacity. This module can supply up to 4.2 V when the battery is fully charged. As a result, it was necessary to bypass the input power diode on the ESP32 board, as the voltage drop would prevent sufficient voltage from reaching the 3.3 V voltage regulator.

The ESP32 will have the function of configuring, receiving, and sending commands to the LoRaMESH module. It is possible to program the ESP32 in access point mode, allowing the microcontroller to serve a local network. This enables communication with it via a web server, where parameters can be adjusted and messages can be sent to other nodes.

The goal of this work is to develop a device capable of performing various tasks, some of which cannot be interrupted by others, this is necessary because the communication will not be synchronous. Therefore, while the device is reading signals from the connected sensors, processing alarms, and monitoring the

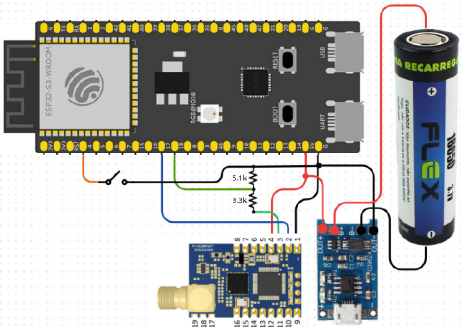

Fig. 3. Circuit of nodes

LoRa network communication channel, task management becomes essential for the optimal functioning of the system. To achieve this, a resource like FreeRTOS must be utilized. FreeRTOS is a lightweight, embeddable, and multitasking real-time operating system (RTOS). It is a library that allows the creation of tasks, assignment of priorities, intervals, specification of the core on which the function will run, and management of their states [18].

3.3 Test of Signal

The tests are intended to identify the characteristics of the device in different scenarios. For this work, samples will be taken for three LoRa configurations (Table 1). Combination "A" prioritizes maximum range and robustness against interference but has the lowest transmission rate. Combination "B" offers a balance between transmission rate, range, and robustness, making it useful for balanced applications. Finally, combination "C" is expected to achieve the maximum transmission rate but with reduced range and robustness, making it ideal for short distances with good signal conditions.

Table 1. LoRa parameter settings used in tests

Combination	Spreading Factor	Bandwidth	Coding rate
A	12	125 kHz	4/8
B	9	250 kHz	4/6
C	7	500 kHz	4/5

In order to evaluate the performance of the implemented network, a test will be conducted to assess the device's sensitivity to noise. Measurements will be taken at both short and long distances, ranging from 100 m to 1 km, within the same range as Lee [10], who monitored the packet delivery ratio of the tested

configurations. In the distance test, a message will be sent, and if it reaches the destination, the device will send a confirmation message acknowledging receipt. The master will then perform a test of Received Signal Strength Indication (RSSI) and Signal-to-Noise Ratio (SNR). From this, we will be able to assess the effectiveness of bidirectional communication, the impact of distance on it, and its sensitivity to noise.

This test does not fully replace a real environment, as there are interferences and distances that would be impractical to reproduce. However, it serves as a starting point, allowing us to validate the system's feasibility in an urban environment.

3.4 Power Consumption

Since it is a battery-powered application, it is important to analyze the system's consumption to estimate its autonomy. Therefore, we must consider the operating mode of the system's components and the power they consume. To calculate the battery autonomy, the formula 1 will be used, where "T" is the time in hours, "C" is the battery capacity, "V" is the battery voltage, "P" is the power consumed by the system, and η is the battery efficiency factor. Due to circuit losses, an efficiency factor of 66% will be used in the calculation.

$$T = \frac{C \times V}{P} \times \eta \tag{1}$$

The power consumption of the device in this work is largely due to the ESP32 development board and the LoRaMESH module. It is necessary to analyze the likely application scenarios to determine the consumption of each component.

3.5 Applicability

The device discussed in this work aims to be an industrial application. There are various standards in the industry regarding automation and instrumentation, whether at the signal level or communication protocols. Based on the prototype, it is necessary to discuss how this device can be used and what corrections should be made. This will be done by highlighting the equipment's features and potential application scenarios.

4 Results

In this chapter, the results will be described, including the production of the device prototype, the noise sensitivity test, the discussion on energy consumption, and its applicability in the industry.

Firstly, the prototype was built on a breadboard 4. The main connection is between the serial port of the LoRa module and the ESP32 board. The LoRa module's antenna is positioned at the upper end, and to its right is the battery

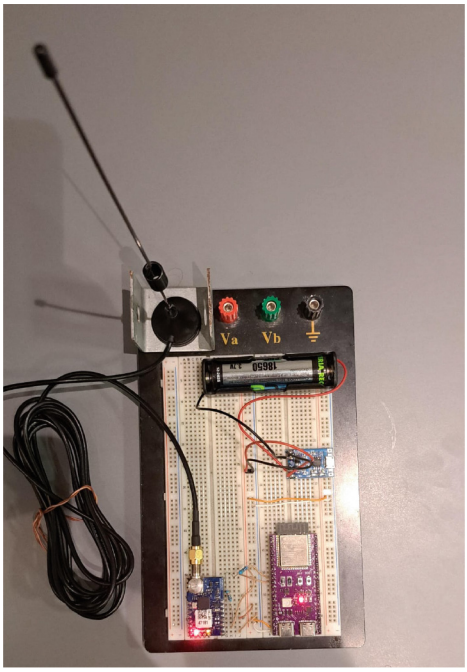

Fig. 4. Breadboard of device

power supply assembly. This setup allows for easier movement of the device during testing.

The web server implemented for the tests (Fig. 5) has the current device information, address, serial number and also a part just for sending messages and results of the RSSI and SNR tests.During testing, different combinations of the device will be used. This feature will reduce the time required to configure the system and facilitate the verification of communication between nodes, as it will be possible to analyze the signal validity based on received messages and the performance of RSSI and SNR.

The web server is activated by sending a signal to GPIO 4 of the ESP32 for a few seconds. At this moment, the board's LED blinks, indicating that the device has entered configuration mode. The ESP32 then creates a Wi-Fi access point with a default name that includes the unique number of the LoRa chip. By connecting to this network and accessing the corresponding IP address, the web server will be displayed, allowing the device to be configured.

4.1 Test of Signal

The stability of the communication link between the nodes is very important to evaluate the device's performance. Distance is an obstacle to implementing this sensor network, so a straight-line test can be conducted to observe the behavior

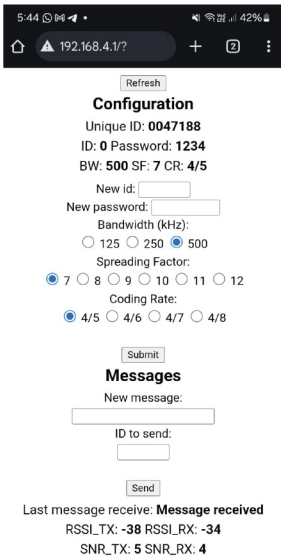

Fig. 5. Web server of device

of the signal strength as they are moved further apart. Conducting this test in an urban environment can also be beneficial to introduce other interference factors that may challenge the communication. Thus, the measurements were taken on Avenida Xavier da Silveira, in Natal, in the state of Rio Grande do Norte, Brazil (Fig. 6).



Fig. 6. Test measurement points

The approximate elevation profile of the terrain was drawn with the help of Google Earth Pro software (Fig. 7). From this profile it is possible to see that measurements can be compromised, in addition, obstacles that could potentially be in the signal path, such as cars, poles and trees, must be considered.



Fig. 7. Terrain elevation profile in distance measurements

The Table 2 presents the signal strength information of the communication (RSSI) during transmission (TX) and reception (RX), as well as for the signal-to-noise ratio (SNR). As a message is transmitted and received, the values were recorded for each configuration. In configuration "A", the communication had relatively high RSSI values, meaning a low signal. The SNR presents large variations, this may be caused by the use of the narrower band, as it increases the sensitivity of data reception, thus being more prone to interference.

Table 2. Distance test using configuration A

Distance (m)	RSSI TX	RSSI RX	SNR TX	SNR RX
100	−93	−89	7	7
250	−107	−103	−2	−5
500	−98	−97	5	5
750	−105	−114	0	−8
1000	−101	−106	2	2

In combination "B" (Table 3), better RSSI results were obtained for short distances, and for long distances, it remained acceptable. The SNR stayed consistent and positive, indicating a good signal-to-noise ratio.

Table 3. Distance test using configuration B

Distance (m)	RSSI TX	RSSI RX	SNR TX	SNR RX
100	−81	−83	8	6
250	−93	−93	4	7
500	−100	−100	2	6
750	−98	−100	1	5
1000	−99	−100	2	6

In Table 4, the last combination of parameters demonstrated very good results for distances of up to 250 m. However, due to the lower spreading factor

and higher bandwidth, the reception sensitivity is reduced, resulting in a more robust signal but with a lower data transmission rate.

Table 4. Distance test using configuration C

Distance (m)	RSSI TX	RSSI RX	SNR TX	SNR RX
100	−72	−71	6	5
250	−94	−94	3	4
500	−98	−97	−1	3
750	−107	−101	−8	1
1000	−101	−99	−4	2

4.2 Power Consumption

The analysis of energy consumption in battery-powered systems is of great importance. Knowing this information, we can calculate the system's autonomy. This is useful for systems that only use batteries, systems that generate energy, such as devices with solar panels, or also for systems that have external power supply but, during a power failure, the monitoring system has time to notify this alarm. Thus, an analysis will be conducted based on the elements that consume the most energy in the device, based on their technical specifications in different modes. In the LoRaMESH module datasheet, we find that the consumption during transmission is 111 mA and during reception is 20 mA when powered at 3.3 V. A necessary piece of information for the calculation is the time it takes for each transmission, known as Time on Air. Based on the data from the LoRa chip manual [20], the following times were calculated and are presented in Table 5. During tests with the modules, a transmission time of every thirty seconds was observed for the network nodes. The consumption will be estimated based on the active cycle per hour between the transmission and reception power consumption. It is noted that for the configuration with the longest transmission time, the power consumed is higher. However, for configurations with very short times, the consumption is primarily determined by the power dissipated during data reception.

Table 5. Time on air of combinations

Combination	Time on air (ms)	Duty cycle (%)	Consumption(mW/h)
A	1190	3.97	77.91
B	78	0.26	66.78
C	9	0.03	66.09

For the microcontroller, two scenarios will be considered: in the first, operating in *Light-sleep* mode, classified as a low-power state, the device consumes 240 µA. In the second scenario, in *Modem-sleep* mode, the microcontroller operates with Wi-Fi turned off, running at 240 MHz in a *dual-core* configuration, executing 128-bit instructions with access to active data and peripherals, resulting in a consumption of 107.9 mA. Based on the collected data, Table 6 presents the impact of the microcontroller on battery autonomy, making it evident. With this material configuration, the device can operate without external power for between one day and one week. Although this is a good result, it falls short of low-power applications using LoRa technology, which can achieve a battery life of up to three years with a 1200 mA battery [15].

Table 6. Duration of battery in hours

Combination	LoRa	LoRa + MCU in *Light-sleep*	LoRa + MCU in *Modem-sleep*
A	119.1	117.91	21.37
B	138.96	137.33	21.93
C	140.41	138.75	21.96

4.3 Aplicability

The device has the potential to be used for fault detection in remote systems, as the mesh topology allows nodes located in remote environments to be monitored more easily.

IoT devices are designed to operate at lower voltages such as 3.3 V and 5 V. In an industrial environment, it is necessary to work with higher voltage signals to increase resistance to interference. This applies to both power supply and signal reading, as is the case with digital inputs, which typically receive 24 V signals. For analog signals, the standard 4 to 20 mA range is used [17]. To be applied in such an environment, the device must include voltage converters for its 5 V power supply and its general-purpose pins, which operate at 3.3 V.

Industrial equipment uses specific protocols, such as Modbus, which is widely adopted, particularly in its Modbus RTU versions, for serial communication over RS232, RS422, and RS485 transport protocols, as well as Modbus TCP/IP [8]. The chosen microcontroller supports asynchronous communication via RS232 and RS485 [6]. For Modbus TCP/IP applications, it would be necessary to reach the equipment via a Wi-Fi network. Another alternative would be to use an external module to implement the Ethernet protocol, such as the WS5500 [13]. A device that communicates using the Modbus protocol could be easily integrated into various industrial processes.

5 Conclusion

The LoRaMESH module from Radioenge helps to implement a network of devices clearly and quickly. Thanks to the well-detailed command protocol in the manual, it was possible to use an ESP32 microcontroller to handle the interface for configuration and messaging with the network. The use of a web server for node configuration and sending messages to other devices simplified the quick setup of each node without the need to connect to any additional equipment. Tests with this module yielded positive results for distances of up to one kilometer, especially with a LoRa parameter configuration focused on balanced usage, ensuring good robustness, range, and allowing a high transmission rate. The device discussed in this work has the potential to be applied in industrial environments, provided that signal corrections and protocol implementations are made to facilitate its integration into processes using Modbus. For future work, it is necessary to observe the network's behavior with more devices and collect real-world data.

References

1. Abdallah, W., Mnasri, S., Nasri, N., et al.: Emergent IoT wireless technologies beyond the year 2020: a comprehensive comparative analysis. In: 2020 International Conference on Computing and Information Technology (ICCIT-1441), pp. 1–5. IEEE (2020)
2. Alahmadi, S., Rojas, P., Idriss, H., Bayoumi, M.: Taxonomy of consumer and industrial IoT. In: SoutheastCon 2023, pp. 418–424. IEEE (2023)
3. de Teleinformática e Automação (GTA), G.: Resumo de lora (2022). https://www.gta.ufrj.br/ensino/eel879/trabalhos_vf_2022_2/grupo_12/resumo-de-lora/. Accessed 20 Jan 2025
4. Biansoongnern, S., Plungkang, B., Susuk, S.: Development of low cost vibration sensor network for early warning system of landslides. Energy Procedia **89**, 417–420 (2016)
5. Community, M.: Meshtastic documentation (2025). https://meshtastic.org/docs/introduction/. Accessed 5 Mar 2025
6. Espressif systems: ESP32-S3-WROOM-1/WROOM-1U Datasheet. Espressif Systems (2025). https://www.espressif.com/sites/default/files/documentation/esp32-s3-wroom-1_wroom-1u_datasheet_en.pdf. Accessed 11 Jan 2025
7. Fernández-Ahumada, L.M., Ramírez-Faz, J., Torres-Romero, M., López-Luque, R.: Proposal for the design of monitoring and operating irrigation networks based on IoT, cloud computing and free hardware technologies. Sensors **19**(10), 2318 (2019)
8. Găitan, V.G., Zagan, I.: Experimental implementation and performance evaluation of an IoT access gateway for the Modbus extension. Sensors **21**(1), 246 (2021)
9. Katiyar, V., Kumar, P., Chand, N.: An intelligent transportation systems architecture using wireless sensor networks. Int. J. Comput. Appl. **14**(2), 22–26 (2011)
10. Lee, H.-C., Ke, K.-H.: Monitoring of large-area IoT sensors using a LoRa wireless mesh network system: design and evaluation. IEEE Trans. Instrum. Meas. **67**(9), 2177–2187 (2018)
11. Mrňa, D., Badánik, B., Novák, A.: Internet of things as an optimization tool for smart airport concept. Eur. Trans.-Trasporti Europei **82** (2021)

12. Oproiu, M., Neagu, A., Cotfas, P.A., Cotfas, D.T., Musuroi, C., Volmer, M.: Lora wide-area network and live objects used in renewable energy monitoring. In: 2021 International Aegean Conference on Electrical Machines and Power Electronics (ACEMP) & 2021 International Conference on Optimization of Electrical and Electronic Equipment (OPTIM), pp. 505–512. IEEE (2021)
13. Pan, Y., Wu, D., Du, D., Wang, H.: Design and performance analysis of protocol conversion between 5G and Modbus TCP. In: 2023 42nd Chinese Control Conference (CCC), pp. 6262–6267 (2023). https://doi.org/10.23919/CCC58697.2023.10240445
14. Radioenge: Manual LoRaMESH (2021). https://www.radioenge.com.br/wp-content/uploads/2021/08/Manual_LoRaMESH.pdf
15. Piyare, R., Murphy, A.L., Magno, M., Benini, L.: On-Demand LoRa: asynchronous TDMA for energy efficient and low latency communication in IoT. Miscellaneous **18**(11), 3718 (2018). https://doi.org/10.3390/s18113718
16. Semtech, A., Basics, M.: AN1200. 22. LoRa Modulation basics **46**, 7–14 (2015)
17. Sharma, P., Singh, M.M.: Design and implementation of a stand-alone remote terminal unit. IOSR J. Electr. Electron. Eng. **7**(1), 74–83 (2013)
18. Cheng, S., Woodcock, J., D'Souza, D.: Using formal reasoning on a model of tasks for FreeRTOS. Formal Aspects Comput. **27**(1), 167–192 (2014). https://doi.org/10.1007/s00165-014-0308-9
19. Singh, R., et al.: ZigBee and long-range architecture based monitoring system for oil pipeline monitoring with the internet of things. Sustainability **13**(18), 10226 (2021)
20. SX1272, L.: Lora sx1272/73 datasheet. semtech (73)
21. Tengshe, R., Akanksha, E.: Security in LP-wan technologies: challenges and solutions. In: 2023 IEEE 8th International Conference for Convergence in Technology (I2CT) pp. 1–4. IEEE (2023)
22. Zijie, F., Al-Shareeda, M.A., Saare, M.A., Manickam, S., Karuppayah, S.: Wireless sensor networks in the internet of things: review, techniques, challenges, and future directions. Indonesian J. Electr. Eng. Comput. Sci. **31**(2), 1190–1200 (2023)