Methodologies for Sustainable Development of TEN-T/RFC Corridors and Core Ports: Economic Impacts Generated in Port-Related Areas

Francesco Russo and Giuseppe Musolino(✉)

DIIES, Università Mediterranea di Reggio Calabria, 89100 Reggio Calabria, Italy
giuseppe.musolino@unirc.it

Abstract. Container ports were born with the container revolution in the last decades of the 20th century. Their evolution is represented by the third-generation ports, playing a crucial role in the global supply chain, becoming generators of value added. One of the measures that facilitates the increase of value added in a third-generation ports is the Special Economic Zone (SEZ). The economic impacts of SEZs is amplified in smart ports, where the three pillars of smartness (ICT, Transport and Energy) are present, and in a core ports connected to TEN-T/RFC corridors. The paper describes the method and the application to quantify the indirect and induced economic impact of a SEZ inside a third-generation port in terms of employment by means of an aggregated model. A case study is reported considering a SEZ in an undeveloped UE region. The results are obtained from a comparative analysis of representative case studies of port impact studies, estimated by means of a specific class of econometric (input-output) models.

Keywords: Sustainable ports · Smart ports · TEN-T corridors · RFC corridors · special economic zone · indirect and induced economic impact · port of Gioia Tauro

1 Introduction

Ports are the gate for the exchange of freight and people. As far as concerns commercial ports, they may be classified according to the generation criterion (see [1–3]; and the references included). The first-generation ports were built close to the cities: the *city-port* was the dominant model for centuries. The second-generation port, or the *industrial port*, was built during the industrial revolution of the 20th century close to industrial plants to support the supply of raw materials and final products. The third-generation ports, as an upgrade of the *container port*, were born with the container revolution, in the last decades of the 20th century. Containerization allows the globalization of the economy. Ports are nodes of a global supply chain, becoming generators of value added [4, 5]. The fourth-generation port, or the *cooperative port*, was born after the 2000s when ports shifted from competition to cooperation with closer ports. Nowadays the fifth-generation port, the *digital port*, introduced massively the emerging ICT in facilitating the horizontal and vertical interactions among port actors [6].

© The Author(s) 2023
O. Gervasi et al. (Eds.): ICCSA 2023 Workshops, LNCS 14110, pp. 515–526, 2023.
https://doi.org/10.1007/978-3-031-37123-3_35

Third-generation ports have been widely explored in scientific literature, as far as concerns two main elements: the port areas, which are important for freight handling and transportation operations; the port hinterlands, which are important for increasing the added value of goods in transit through ports. A detailed study concerned an important hub container port. The limits and weaknesses of the port area and the general actions to be implemented to reduce the costs of a third-generation port were identified. The relationship with the hinterland and, in particular, with the research centers have been studied and the main industrial sectors connected with a third-generation port, which are logistics, mechanics and agri-food, were analyzed (see [7] and references included).

One of the measures that could facilitate the increase of added value in third-generation ports are Special Economic Zones (SEZs). The existing literature on economic impacts of SEZs shows that they boost economic activities in port-related areas in line with sustainable development of ports. Recent studies examined different elements connected to the activation of a SEZ in a hub container port, which is a core port connected to a TEN-T and RFC corridor, such as territorial attractiveness, the aggregate economic impact and the disaggregated one, the system of higher education and research. The positive effects of a SEZ may be amplified when the port is a smart port, where the three pillar of smartness (ICT, Transport and Energy) are present (see [8, 9] and references included).

An analysis presented in [10] showed that higher times are necessary to export goods in many developed countries. The study presented in [11] showed relevant differences between export/import times of goods in countries having similar technical-administrative structures and belonging to the same economic-political area. The European countries present high variances in times connected to the export of goods respect to an average value of ten days. According to [11], the Italian Prime Ministry presented an analysis of times connected to export issues, disaggregating them into documentation times, customs times, handling and transport times [12]. The results showed that customs times are similar for all countries, while documentation and handling times are considerably different. These times are important as they are connected to the export capacities of a country. It is worth noting that the documentation and customs times depend on the administrative organization of the country and not on the ports' organization.

The paper describes the methods to quantify the indirect and induced economic impact of a SEZ given the aggregated quantity of direct impact. The model and the parameters are obtained from a comparative analysis of representative case studies of port impact studies, estimated by means of a specific class of econometric (input-output) models. A test case in terms of employment is reported, considering the port of Gioia Tauro in Southern Italy.

The following part of the paper is articulated into four sections. Section 2 deals with the theoretical background and the backbone of the modelling framework (input-output models) of the port impact studies. Section 3 reports some examples of port impact studies executed by the input-output modelling framework. Section 4 presents the results of the modelling estimation of the aggregate indirect and induced impact of employment generated by the activation of the SEZ in Calabria (Italy), as part of a more general modelling framework. The last section reports the conclusions and the further developments.

The proposed work is of interest for the technical managers of ports and SEZs and for the politicians of public bodies, who have to plan investments in areas with a slow development. The work is also useful for researchers because it allows to apply a synthetic method for the study of specific transport-territory interaction problems, for which the results are known in many real cases.

2 Economic Impact Estimation: Input-Output Models

In the behalf of literature on port impact studies, the Input-Output (IO) model ([13, 14], and included references) allow the estimation of the direct, indirect and the induced impacts of port through the identification of interactions among the port firms.

The basic principle underlying the IO model is the production-consumption one (Fig. 1), according to which firms, in order to produce some outputs needs some inputs.

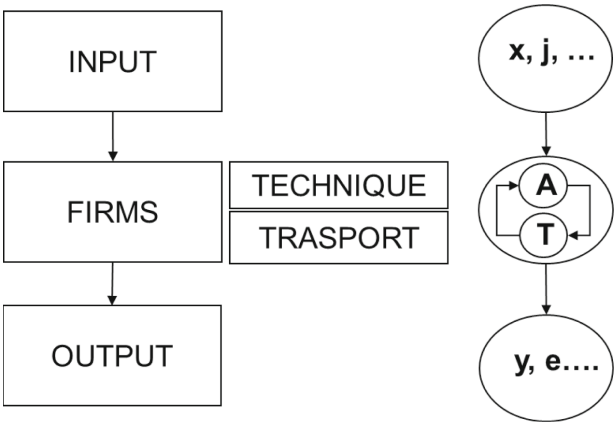

Fig. 1. Production-consumption principle underlying the IO model

The basic principle is to equate the products generated (internally produced and imported) and the products consumed (transformed into other products, internal consumed and exported).

The mechanism of production-consumption is regulated by the technique of transformation (matrix of technique, **A**), and by the amount of trade among regions (matrix of trade, **T**).

The basic equation of the IO model simulates inter-dependencies between economic sectors through technical coefficients belonging to matrix **A**. Equation (1.a) establishes a balance inside an (open to import and export) region between the internal and external production, $\mathbf{x} + \mathbf{j}$, and the internal intermediate demand, $\mathbf{A}\,\mathbf{x}$, the final demand, **y**, and the export, **e**:

$$\mathbf{x} + \mathbf{j} = \mathbf{A}\,\mathbf{x} + \mathbf{y} + \mathbf{e} \tag{1.a}$$

where:

x, vector of internal production;
j, vector of import;
y, vector of internal production;
e, vector of export.

It is worth noting that the variables are disaggregated according to sectors. By putting in evidence the vector **x**, Eq. (1.b) captures the multiplier effects at sector level:

$$\mathbf{x} = (\mathbf{I} - \mathbf{A})^{-1}[(\mathbf{y} + \mathbf{e})] - \mathbf{j} \tag{1.b}$$

where:

$\mathbf{B} = (\mathbf{I} - \mathbf{A})^{-1}$ is the multiplier of production (or Leontief matrix) activated by the internal consumption, **y**, and by export, **e**;

I is the identity matrix.

The IO model able to reproduce a spatial representation of economy is obtained by introducing the trade coefficients to locate production-consumptions across regions. In this case, the model is called Multi-Regional-Input-Output (MRIO) model. Equation (2.a) establishes a balance among several regions between the internal and external production, $\mathbf{x} + \mathbf{j}$, and the internal intermediate demand, **Ax**, the internal final demand, **y**, and the export, **e**:

$$\mathbf{x} + \mathbf{j} = \mathbf{T}\,\mathbf{A}\,\mathbf{x} + \mathbf{T}(\mathbf{y} + \mathbf{e}) \tag{2.a}$$

It is worth noting that the variables are disaggregated according to sectors and regions. By putting in evidence the vector **x**, Eq. (2.b) captures the multiplier effects at sector and region levels:

$$\mathbf{x} = (\mathbf{I} - \mathbf{T}\,\mathbf{A})^{-1}[(\mathbf{y} + \mathbf{e})] - \mathbf{j}] \tag{2.b}$$

with $\mathbf{B'} = (\mathbf{I} - \mathbf{T}\,\mathbf{A})^{-1}$, multiplier of production activated by the internal consumption, **y**, and export, **e**, in the different sectors and regions.

The financial flows expressed by means of IO and MRIO models are related with the physical flows of goods (and passengers). The physical flows may be estimated by means of Transport System Models (TSMs), which are generally composed by a transport supply model, a travel demand model and a supply-demand interaction model (see [15], and references included).

3 Port Impact Studies

The major challenge in port impact studies is the identification of the port firms and of the degree of port dependency of these firms with the port hinterland [16]. According to classification of literature [12, 16], port firms may be subdivided into:

- *port-required* which activities rely directly to the operation of port facilities;
- *port-attracted*, dependent on port-required ones and that are attracted because the presence of the port generates higher value added than value added generated in other ports;

- *port-induced*, which expand their markets by means of the presence of the port.

For each of the above category of firms, it is possible to associate three categories of economic impacts (see Fig. 2):

- *direct impact,* generated by port-required firms directly involved in the supply of the port operations;
- *indirect impact,* generated by port-attracted firms which provide labour, services, materials, and other items to port-required firms;
- *induced impact,* generated by port-induced firms that comes from household purchases of goods and services made possible because of wages generated by activities of port-attracted and port-attracted firms.

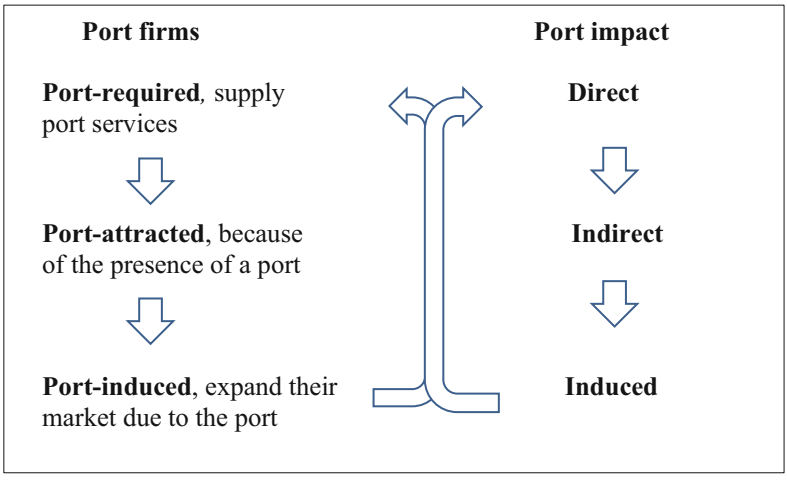

Fig. 2. Relationships between port firms and categories of impacts.

Several port impact studies have been presented in the literature based on the use of IO framework. The existing studies may be grouped into two categories according to the level of disaggregation of the representation of port firms and of their interactions with the local economy [17]. The first group of studies identify the structural factors in the port and simulate the port-city interactions, according to a Land Use Transport Interaction (LUTI) process [18, 19]. In this case, the land use variables, such as land consumption, are endogenous inside the IO model. The second group of studies represents the port in more aggregate terms and simulate the interactions between the port and the national economies, according to a National Economic Transport Interaction (NETI) process [20, 21]. In this case, the variables considered have a financial nature and the IO model estimates the impact of changes in transport networks and in spatial economies on interregional, and even in international, trade patterns.

The paper reports a description of four port impact studies concerning four European ports: Antwerp (Belgium), Trieste (Italy), Santander (Spain), and Algeciras (Spain).

The economic impact study of the port of Antwerp is based on microeconomic data related to the port firms and between port firms and the Belgian economy in year 2000 [22]. The economic impact of the port of Trieste was estimated with a IO table of year 2007, and having as reference the port sectors [23]. The economic impact study of port of Santander allowed to obtain the direct impacts using accounting information about the port firms and indirect and induced impacts by means of the Spanish IO table [24]. The economic impact of the port of Algeciras was obtained as result of a survey and of accounting data analysis of port firms, as far as concerns the direct impact. The indirect impact was obtained from data about goods and services purchased by port firms [25].

The data about the direct and indirect value added and employment generated are reported in Table 1, which also reports the handled traffic. It emerges that the multiplier of indirect employment activated by a unit of direct employment ($m_{emp\text{-}indirect} = emp_{indirect}/emp_{direct}$) ranges from 0,46 in the port of Algeciras to 3,96 in the port of Trieste; while the multiplier of indirect value-added activated by a unit of direct value-added ($m_{va\text{-}indirect} = va_{indirect}/va_{direct}$) ranges from 0,21 in the port of Algeciras to 4,37 in the port of Trieste. The induced multiplier, not reported in Table 1, for the port of Trieste is $m_{va\text{-}induced} = 1.46$ [23]. It is worth noting that the port of Algeciras has lower multipliers values due to its exclusive nature of transhipment container port, where there is high rate of transit containers. The multipliers are more elevated, on average, in the ports that have different functions that the transhipment one. It is also important to highlight that no SEZ operates in any of the four ports examined.

Table 1. Handled traffic, direct and indirect employment and value added in the four ports

Port	MTonn	Employment (direct)	Employment (indirect)	Value added (direct)	Value added (indirect)
Santander	5,13	2458	6466	240	298
Algeciras	91	2294	1044	155	32
Antwerp	190	63080	89551	9342	8361
Trieste	56,6	2890	11443	182	796

(sources: [22–25])

The port of Algeciras has a similar structure of the port of Gioia Tauro, as both ports mainly handle container traffic. The handled traffic, the direct and indirect employment and value added of the port of Algeciras is reported in Table 2. The handled containers are sub-divided into containers in transit through the port and containers in import/export to/from the country. The data of Table 2 show that the value of multiplier for employment, $m_{emp\text{-}indirect}$, is similar for transhipment and import/export operations; while the value of multiplier for value-added, $m_{va\text{-}indirect}$, ranges from 0,19 for transhipment to 0,30 for import/export operations.

4 Test Case of SEZ Based on Gioia Tauro Core Port

The first comprehensive law about SEZs in Italy was forwarded to the Italian Parliament in September 2015 by the Calabria Regional Council, on the basis of the proposal of the Regional Government. The proposal, as result of intense work carried out with EU, was verified by the Italian Government during 2016. Having considered its potential benefits and its juridical consistency, the Italian Parliament decided to extend the law to all Regions of Southern Italy. The Prime Minister Gentiloni and the Minister for Southern Italy De Vincenzi emanated the Decree Law n.91 of June 2017, which establishes the SEZs in Italy and the Regulation was emanated on 25 January 2018 (DPCM n.12). The DPCM regulates the procedures and conditions for the establishment of the SEZs, which are defined as geographically delimited and clearly identified areas, located within the Italian border, also composed of not-physically adjacent areas but presenting a functional-economic connection. Furthermore, the DPCM identified the role of the Port Authority by setting up a Steering Committee headed by the President of the Authority, strengthening the role of the President. The first brick towards the creation of the SEZ in Italy was crated, in order to reduce the gap in export times that separate Italy from the main European competitors, recalled in the introduction.

Table 2. Handled traffic, direct and indirect employment and value added in port of Algeciras

Algeciras	MTEUs	Direct employment	Indirect employment	Direct value added	Indirect value added
Transit	2,517	1792	809	132,00	25,00
Import/Export	0,148	502	235	23,00	7,00

(source: [25])

The SEZ in Calabria was planned to facilitate physical and functional integration of ports and airports and industrial areas of the region, according to the indications of the DPCM. The fulcrum of the SEZ is the port of Gioia Tauro, which is a core port of the TEN-T corridor 5 and RFC corridor 3. The port of Gioia Tauro needs to complete its full transition towards a third-generation port, boosting settlement of industrial activities in the large industrial agglomeration existing in its hinterland.

According to the strategic development plan of SEZ, the SEZ should attract mechanical and agri-food firms, transport and logistics companies in the hinterland of the port of Gioia Tauro and in the industrial areas of Calabria region.

4.1 Indirect Impact of SEZ

This section reports the calculation of the expected indirect and induced impacts of the establishment of the SEZ related to the port of Gioia Tauro.

The general estimation of the effects of the studied SEZ is conducted through a framework composed of six models: aggregated direct impact [8]; land capacity constraint; economic-functional link; settlement of firms; incentives; aggregated indirect and induced impacts.

The model "indirect and induced impact" allows to estimate, in aggregate terms at regional level, the indirect and induced impacts on employment generated by the activation of SEZ.

The indirect impacts are related to the employment generated by firms that are economically interdependent from the firms directly beneficiaries of the SEZ, or are indirectly beneficiaries of the SEZ. In the case of the SEZ area close to the port of Gioia Tauro, the beneficiaries of the SEZ are port-attracted firms that can increase their activities due to the presence of the port.

The induced impacts are related to the employment generated by firms for the purchase of goods and services by households whose members are employed in firms directly and indirectly beneficiaries of the SEZ.

The methodology used to estimate the indirect and induced impacts is based upon the methods reported in Sect. 3. Hereby it is reported the aggregate estimations for all economic sectors of the indirect and induced impacts on employment generated by direct employment.

The indirect impacts on employment are estimated by means of the following equation:

$$\mathrm{emp}_{\mathrm{SEZ(indirect\text{-}10)}} = \mathrm{m}_{\mathrm{emp-indirect}} \times \mathrm{emp}_{\mathrm{SEZ(direct-10)}}$$

with

- $\mathrm{emp}_{\mathrm{SEZ(indirect\text{-}10)}}$, total indirect employment generated by SEZ in Calabria ten years after the starting year (in the hypothesis of a full activation of the SEZ, with complete availability of financial resources and decrees for simplification, at the starting year);
- $\mathrm{m}_{\mathrm{emp\text{-}indirect}}$, indirect multiplier, or total indirect employment generated by total direct employment;
- $\mathrm{emp}_{\mathrm{SEZ(direct\text{-}10)}}$, total direct employment generated by SEZ in Calabria ten years after the starting year.

The induced impacts on employment are estimated by means of the following equation:

$$\mathrm{emp}_{\mathrm{SEZ(induced-10)}} = \mathrm{m}_{\mathrm{emp-induced}} \times (\mathrm{emp}_{\mathrm{SEZ(direct-10)}} + \mathrm{emp}_{\mathrm{SEZ(indirect-10)}})$$

with

- $\mathrm{emp}_{\mathrm{SEZ(induced\text{-}10)}}$, total induced employment generated by SEZ in Calabria after ten years from the starting year (see definition above);
- $\mathrm{m}_{\mathrm{emp\text{-}induced}}$, induced multiplier, or total induced employment generated by total direct and indirect employment.

According to the comparative analysis reported in Sect. 3, the following results have been obtained:

- the estimated value of the indirect multiplier of employment generated by SEZ Calabria should range from 0.6 in a worst-case scenario to 1.0 in a best-case scenario: $\mathrm{m}_{\mathrm{emp\text{-}indirect}} \in [0.6–1.0]$

- the estimated value of the induced multiplier of employment generated by SEZ Calabria should range from 0.2 in a worst-case scenario to 0.6 in a best-case one; $m_{emp\text{-}ind} \in [0.2–0.6]$.

The above estimated ranges lead to the definition of a base-line scenario where the indirect and induced multipliers are assumed respectively equal to $m_{emp\text{-}indirect} = 0.8$ and $m_{emp\text{-}induced} = 0.4$.

Figure 3 reports the estimated indirect and induced employment in the three above scenarios activated by the direct employment generated by the SEZ. The value of direct employment had been estimated by means of the aggregated impact model presented in [8].

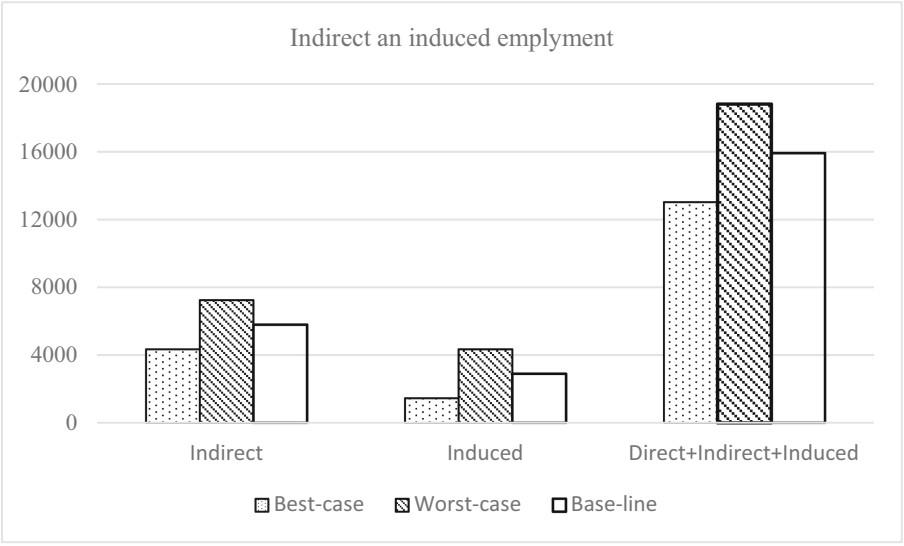

Fig. 3. Estimated indirect and induced employment by the activation of SEZ.

5 Conclusions

Third-generation ports were born after the container revolution, in the last decades of the 20th century. They play a crucial role in the global supply chain, becoming generators of value added. One of the measures that facilitates the increase of value added in third-generation ports is the Special Economic Zone (SEZ). The economic impacts of SEZs is amplified in smart ports, where the three pillar of smartness (ICT, Transport and Energy) are present, and in a core port connected to TEN-T/RFC corridors. The paper presented a methodology to quantify the indirect and induced economic impacts in terms of employees of a SEZ starting from the knowledge of the direct impacts.

SEZ in Calabria was conceived to operate in several existing industrial areas of the region, having its fulcrum around the transhipment hub port of Gioia Tauro, which is a

core port, connected to a TEN-T/RFC corridor. The main objectives of the SEZ were to reduce the gap in export times that separate Italy from the main European competitors; to facilitate physical and functional integration of ports and airports and industrial areas of the region; to complete the full transition of Gioia Tauro towards a third-generation port, in order to become a value-added generator.

The paper described a test application to a planned SEZ in the Calabria region. The results are obtained from a comparative analysis of representative case studies of port impact studies, estimated by means of a specific class of econometric (input-output) models.

The results of the modelling estimation of the aggregate indirect and induced impact of employment generated by the activation of the SEZ in Calabria showed relevant positive impacts.

The future research activities regard the specification, calibration and validation of a spatialized Leontief table, which will allow an impact analysis by economic sector on the Calabrian economy generated by the full deployment of the SEZ measures.

Acknowledgement. This study was carried out within the MOST – Sustainable Mobility National Research Center and received funding from the European Union Next-Generation EU (PIANO NAZIONALE DI RIPRESA E RESILIENZA (PNRR) – MISSIONE 4 COMPONENTE 2, INVESTIMENTO 1.4 – D.D. 1033 17/06/2022, CN00000023). This manuscript reflects only the authors' views and opinions, neither the European Union nor the European Commission can be considered responsible for them.

References

1. UNCTAD Port Marketing and the Challenge of the Third Generation Port (1994)
2. UNCTAD Fourth-Generation Port: Technical Note (1999)
3. Russo, F., Musolino, G.: Quantitative characteristics for port generations: the Italian case study. Int. J. TDI **4**, 103–112 (2020). https://doi.org/10.2495/TDI-V4-N2-103-112
4. Troch, F., Meersman, H., Sys, C., Van De Voorde, E., Vanelslander, T.: The added value of rail freight transport in Belgium. Res. Transp. Bus. Manag. **44**, 100625 (2022). https://doi.org/10.1016/j.rtbm.2021.100625
5. Russo, F., Musolino, G., Assumma, V.: Ro-Ro and Lo-Lo alternatives between Mediterranean countries: factors affecting the service choice. Case Studies on Transport Policy **11**, 100960 (2023). https://doi.org/10.1016/j.cstp.2023.100960
6. Russo, F., Musolino, G.: The role of emerging ICT in the ports: increasing utilities according to shared decisions. Front. Future Transp. **2**, 722812 (2021). https://doi.org/10.3389/ffutr.2021.722812
7. Russo, F., Chilà, G.: Structural factors for a third-generation port: actions and measures for Gioia Tauro, Italy. In: The Regional Transport Plan. In Proceedings of the Urban and Maritime Transport 2021, WIT Transactions on the Built Environment, vol. 204, pp. 17–30. WIT Press, 16 June 2021
8. Musolino, G., Cartisano, A., Fortugno, G.: Special economic zones planning for sustainable ports: aggregate economic impact of port of Gioia Tauro. In: Gervasi, O., Murgante, B., Misra, S., Rocha, A.M.A.C., Garau, C. (eds.) Computational Science and Its Applications – ICCSA 2022 Workshops. LNCS, vol. 13381, pp. 60–71. Springer, Cham (2022). https://doi.org/10.1007/978-3-031-10548-7_5. ISBN 978-3-031-10547-0

9. Musolino, D.A., Panuccio, P.: Special economic zones planning for sustainable ports: the test case of territorial attractiveness and urban planning in Calabria Region. In: Gervasi, O., Murgante, B., Misra, S., Rocha, A.M.A.C., Garau, C. (eds.) Computational Science and Its Applications – ICCSA 2022. LNCS, vol. 13381, pp. 72–84. Springer, Cham (2022). https://doi.org/10.1007/978-3-031-10548-7_6. ISBN 978-3-031-10547-0
10. Pellicanò, D.S., Trecozzi, M.R.: Special economic zones planning for sustainable ports: general approach for administrative simplifications and a test case. In: Gervasi, O., Murgante, B., Misra, S., Rocha, A.M.A.C., Garau, C. (eds.) Computational Science and Its Applications – ICCSA 2022. LNCS, vol. 13381, pp. 47–59. Springer, Cham (2022). https://doi.org/10.1007/978-3-031-10548-7_6. ISBN 978-3-031-10547-0
11. International Finance Corporation Doing Business 2014: Understanding Regulations for Small and Medium-Size Enterprises (2013)
12. Presidenza del Consiglio dei Ministri Iniziativa Di Studio Sulla Portualità Italiana (2014)
13. Barna, T. (ed.): Structural Interdependence and Economic Development. Palgrave Macmillan, London, (1963). ISBN 978-1-349-81636-1
14. Kockelman, K.M., Jin, L., Zhao, Y., Ruíz-Juri, N.: Tracking land use, transport, and industrial production using random-utility-based multiregional input-output models: applications for Texas trade. J. Transp. Geogr. **13**, 275–286 (2005). https://doi.org/10.1016/j.jtrangeo.2004.04.009
15. Cascetta, E.: Transportation Systems Engineering Theory and Methods. Springer, New York (2013). https://doi.org/10.1007/978-1-4757-6873-2. ISBN 978-1-4757-6873-2
16. Davis, H.C.: Regional port impact studies: a critique and suggested methodology. Transp. J. 61–71 (1983)
17. Russo, F., Musolino, G.: A unifying modelling framework to simulate the spatial economic transport interaction process at urban and national scales. J. Transp. Geogr. **24**, 189–197 (2012). https://doi.org/10.1016/j.jtrangeo.2012.02.003
18. De la Barra, T.: Integrated Land Use and Transport Modelling: Decision Chains and Hierarchies, 1st ed. Cambridge University Press, Cambridge (1989). ISBN 978-0-521-24318-6
19. Echenique, M.: Econometric models of land use and transportation. In: Hensher, D.A., Button, K.J., Haynes, K.E., Stopher, P.R. (eds.) Handbook of Transport Geography and Spatial Systems, pp. 185–202. Emerald Group Publishing Limited (2004). ISBN 978-0-08-044108-5
20. Cascetta, E., Nuzzolo, A., Biggiero, L., Russo, F.: Passenger and freight demand models for the Italian transportation system. In: Proceedings of the 7th World Conference on Transport Research; Vol. II
21. Bachmann, C.: Calibrating and applying random-utility-based multiregional input–output models for real-world applications. Netw. Spat. Econ. **19**(1), 219–242 (2019). https://doi.org/10.1007/s11067-019-9444-3
22. Coppens, F., et al.: Economic impact of port activity: a disaggregate analysis - the case of Antwerp. SSRN J. (2007). https://doi.org/10.2139/ssrn.1687569
23. Danielis, R., Gregori, T.: An input-output-based methodology to estimate the economic role of a port: the case of the port system of the Friuli Venezia Giulia Region Italy. Marit. Econ. Logist. **15**, 222–255 (2013). https://doi.org/10.1057/mel.2013.1
24. Mantecón, I.M., Millán, P.C., Castro, J.V., González, M.Á.P.: Economic Impact of a Port on the Hinterland: Application to Santander's Port. IJSTL **4**, 235 (2012). https://doi.org/10.1504/IJSTL.2012.047487
25. Coronado Guerrero, D., et al.: Economic Impact of the Container Traffic at the Port of Algeciras Bay. Springer, Heidelberg (2006). https://doi.org/10.1007/3-540-36789-6. ISBN 978-3-540-36789-5

Open Access This chapter is licensed under the terms of the Creative Commons Attribution 4.0 International License (http://creativecommons.org/licenses/by/4.0/), which permits use, sharing, adaptation, distribution and reproduction in any medium or format, as long as you give appropriate credit to the original author(s) and the source, provide a link to the Creative Commons license and indicate if changes were made.

The images or other third party material in this chapter are included in the chapter's Creative Commons license, unless indicated otherwise in a credit line to the material. If material is not included in the chapter's Creative Commons license and your intended use is not permitted by statutory regulation or exceeds the permitted use, you will need to obtain permission directly from the copyright holder.

