# Arduino and the Construction of a Height and Heart Rate Meter

Andrade Vera, José Catuto González(✉), and Carlos Mendoza González(✉)

Universidad Estatal Península de Santa Elena, La Libertad, Santa Elena, Ecuador
{aandrade,jose.catutogonzalez,cmendoza}@upse.edu.ec

**Abstract.** Due to the health emergency caused by the disease called COVID-19, the health authorities of each country implemented preventive measures, including maintaining a social distance of at least 2 m. Clinical laboratories perform a wide variety of tests, which is why they have a large influx of patients every day, in the same way, the first process they perform is the taking of vital signs, being this, the taking of height and cardiac pulse, which has been affected by the pandemic, as it involves direct contact with people, increasing the likelihood of contagion. Due to the above mentioned, the objective of this article is the development of a height and heart rate meter in order to avoid physical contact in the taking of vital signs in the clinical laboratory "Inmunolab", which will work in conjunction with a web and mobile application, which can be used by the following users: doctor in charge and worker. The height and cardiac pulse meter are based on several electrical components for its correct functioning, being these: Arduino NANO, ultrasonic sensor HC SR04, led display, potentiometer, heart rate sensor, 9v battery and bluetooth module HC-0.

**Keywords:** Arduino · Web application · Mobile application

## 1 Introduction

Evolution has been something that everyone has had to experience and more in these times where absolutely everything is being optimized by computer processes, in all areas of daily life there are changes, from being able to monitor a house to be able to buy everything online with the comfort and simplicity through the use of a mobile device, regardless of the economic level of people, human beings have become very dependent on technologies, because of this, all individuals have a technological device with which they can interact with all the services offered by the vast network of internet [1].

Coronavirus is an infectious disease caused by the SARS - CoV-2 virus, causing a pandemic that has drastically changed daily life and the way people relate to each other [2].

Covid-19 is easily spread through physical contact from person to person, for this reason and to avoid contagion [3], the World Health Organization (WHO) recommends keeping a social distance in enclosed and open-air places, being cautious about physically interacting with other individuals, since the virus can spread even if the infected person has no symptoms [2].

© The Author(s), under exclusive license to Springer Nature Switzerland AG 2023
O. Gervasi et al. (Eds.): ICCSA 2023 Workshops, LNCS 14108, pp. 44–57, 2023.
https://doi.org/10.1007/978-3-031-37117-2_4

The COVID-19 pandemic has generated that some processes that used to work correctly now turn out to be inefficient. In that sense, the detection of these problems in the processes most affected by the current situation is a matter of survival for different organizations, not only in the field of business, companies, or enterprises, but also in health, which has been very important and at the same time has been the most affected in the pandemic that is going through the whole world [4].

The coronavirus pandemic accelerated the adoption of technological trends and in the following years we will witness how organizations will integrate the use of these, to manage the crisis and prepare for an eventual recovery; it will be an important year where digital technologies will play a fundamental role to overcome some challenges that the world is currently facing, for example, remote work through the new forms of interaction in public spaces [5].

A new trend that has revolutionized and thrived in this era is the Internet of Medical Things (IoMT), which refers to a system of machines and objects equipped with technologies capable of collecting data and communicating with each other. It has different applications and its use ranges from tele-medicine to the development of wearables, which are versatile technologies, such as smart watches [6].

In view of what has happened in the world with the COVID 19 pandemic, people have opted to optimize many processes that omit physical contact to avoid contagion [7].

The clinical laboratory "INMUBOLAB", is an establishment that performs different types of tests, so it has a large influx of patients. Before any examination it is necessary for each patient to have his vital signs taken, because it is a standard that must be followed with obligatory nature, the physical contact was inevitable, since, in the process of taking the height, the patient must stand next to a measuring tape that is usually located on the wall, therefore, a healthy distance was not maintained, making the risk of contagion remain throughout the process. For the taking of the cardiac pulse, it is true that there are devices that allow this work to be done, but there is still physical contact.

It is important for a clinical laboratory to have a device that allows non-contact pulse and height measurements because this reduces the risk of infectious disease transmission. Non-contact devices, such as pulse sensors and laser-based height gauges, allow laboratory personnel to take accurate measurements without having to touch the patient [8].

In addition, non-contact devices may also be more comfortable for patients, especially those who may be uncomfortable with physical contact. This may be especially important for patients with infectious diseases or immunocompromised patients, for whom physical contact may pose a greater risk [9].

Finally, non-contact devices can be more accurate and consistent in taking measurements, which may be important for monitoring and follow-up of patients with chronic diseases or recovering from injury or surgery. In summary, the adoption of non-contact devices in a clinical laboratory can improve the safety, convenience and accuracy of patient measurement taking [10].

The device that covers the present proposal, being able to take height and cardiac pulse, contains two of the main data in a sign taking, which avoids all contact between

the medical team and patient. Technologies are created to evolve and optimize processes, which is what this project seeks to improve.

This article shows the development of a height and heart rate meter to avoid physical contact in taking vital signs in the clinical laboratory "INMUNOLAB" in times of covid19, to improve the process of taking signs and maintain a prudent distance, all the information obtained will be stored in a database to be managed in the best way and then be displayed by the laboratory for their results. The project will be divided in two parts, the first one will be focused in all that is Hardware, for this reason the IoT architecture model will be used, which is composed of four levels [8], in the second part we work on the development of the web and mobile application.

## 2 Theoretical Foundations

This section presents the theoretical and technological bases on which the development of the height and heart rate meter is based. First, the Arduino concept and its application on the Internet of Medical Things is described. Secondly, the development and application of the device is presented.

### 2.1 Arduino

Arduino is an open-source platform, used for the creation of electronics, which is based on free hardware and software, is flexible and easy to use by developers and creators [11].

This platform allows you to create different types of microcomputers from a single board and can be used for different purposes [11]. Among the benefits of using Arduino, it can be highlighted that: it simplifies the process of working with microcontrollers, it is low cost, being more accessible compared to other platforms, the software works on the Windows, Mac OS, and Linux operating systems, the programming environment is simple and straightforward, it is expandable, as it is open-source, and it is hardware extensive, providing users with the opportunity to build the development board version, understanding how it works and saving money [11]. Taking this into account, technological advances nowadays have allowed us to visualize from another perspective a world interconnected completely by all commercial, industrial, and domestic sector [12].

In recent years, information and communication technologies have evolved significantly in the creation of interconnected electronic devices and virtual machines, giving rise to the Internet of Things (IoT), allowing for intelligent automation of processes from anywhere, exchanging information and interacting with each other [12].

The technology applied to healthcare clearly represents devices capable of communicating via the internet to transfer data about patients. This is called Medical Internet of Things (IoMT), which is the application of technology in the healthcare sector, covering one of the areas where the benefits are most significant [13]. To implement IoMT, it is necessary to integrate technological methods to provide network-based services [13]. One of the devices that stands out in the Medical Internet of Things is Arduino, allowing the creation of devices such as telemedicine, wearables, drones, augmented reality, sensors, among others [14]. This generates great benefits, such as providing

real-time information on the patient's health status, allowing personalized patient tracking, efficient management of available medical resources, reducing errors in diagnosis and treatment, reducing treatment time, and improving the patient's experience in the healthcare center [12].

### 2.2 Arduino and Its Application in Medical Internet of Things

In recent years, Arduino has become a popular tool for prototyping and solutions in the field of Internet of Things (IoT), including its application in the field of medicine.

In medicine, IoT devices based on Arduino are used for a wide variety of applications, from real-time patient monitoring to the automation of medical devices. One of the key benefits of Arduino is its flexibility and adaptability to different needs and environments [15].

For example, sensors connected to Arduino devices can be used to measure and monitor a variety of physiological variables, such as heart rate, blood pressure, temperature, and blood oxygen concentration. The data collected by the sensors can be transmitted over the Internet to a cloud platform, where it can be analyzed and visualized [15].

In addition, Arduino devices can also be used to control medical devices, such as infusion pumps, vital sign monitors, and diagnostic equipment, by automating their functions and integrating with other systems [16].

Arduino has become a popular tool for creating IoT devices in the field of medicine, and its adaptability and flexibility make it suitable for a wide variety [16].

### 2.3 Importance of Computer Systems in Clinical Laboratories

Computer systems are essential in clinical laboratories due to their ability to automate processes and improve efficiency in data management and analysis. Some of the main reasons why they are important are as follows [17]:

1. Improved efficiency: Computer systems allow for the automation of routine processes, such as data entry, which reduces time and human errors in these tasks. This improves the overall efficiency of the laboratory, resulting in faster and more accurate patient care [17].
2. Data management: Computer systems allow for the efficient management of substantial amounts of patient data, which can include test results, clinical history information, and billing details. The ability to quickly organize and access this data improves the quality of patient care and enables better clinical decision-making [17].
3. Accuracy of test results: Computer systems allow for automated analysis and interpretation of test results, which reduces the possibility of human errors and improves the accuracy of the results [17] systems can incorporate robust security measures to protect the privacy and security of patient data [17].

Computer systems are fundamental to improving efficiency and accuracy in clinical laboratories, as well as protecting the privacy and security of patient data. These systems allow for more effective management of patient data and better clinical decision-making, resulting in better care and outcomes for patients.

### 2.4 Technological Advances in the Healthcare Sector for Social Distancing

During the COVID-19 pandemic, social distancing has become an important measure to prevent the spread of the virus. Technology has played a key role in enabling people to maintain social distance while receiving medical care. The following are some technological advances in healthcare for social distancing [18]:

1. Telemedicine: Telemedicine has allowed patients to receive medical care from the comfort of their homes, reducing the risk of exposure to the virus. Patients can schedule virtual appointments with their doctors, get diagnoses and prescriptions, and receive health follow-up through online platforms and applications [19].
2. Medical robots: Medical robots have been used in hospitals to reduce the exposure of healthcare workers to the virus. These robots can perform tasks such as cleaning and disinfecting rooms, transporting supplies, and delivering food and medication to patients [20].
3. Wearables: Wearables are portable devices that allow remote health monitoring. Patients can use devices such as smartwatches and bracelets to monitor their heart rate, physical activity, and sleep and share data with their doctors [21].
4. Artificial intelligence: Artificial intelligence has been used to develop early detection systems for COVID-19 and to analyze large amounts of data related to the pandemic. It has also been used to develop algorithms that can help doctors make decisions about patient treatment [22].
5. Virtual reality: Virtual reality has been used to create telepresence experiences that allow patients to interact with doctors and other patients in virtual environments. This can be particularly useful for patients who cannot leave their homes due to the pandemic [23].

These technological advances have been crucial in enabling people to maintain social distance while receiving medical care during the COVID-19 pandemic. Additionally, many of these advances have the potential to improve healthcare in the future and improve accessibility to medical care for people living in remote areas or having difficulty accessing traditional medical care.

### 2.5 Web Application

A web application is a version of a webpage that adapts to any mobile device, regardless of the operating system it uses, meaning they are multi-platform apps. They are based on HTML, CSS, or JavaScript [24].

Web applications require a browser to function, and therefore, do not need to be downloaded from a store such as Play Store, App Store, among others. They do not take up memory on mobile devices and do not require updates, so users will always be able to view the latest version of the application [24].

Such apps are distinguished into three levels, the upper level that interacts with the user, the lower level that provides information, and the intermediate level that processes data [24].

A web application is software designed to run in a web browser. Unlike desktop applications that are installed on a computer, web applications run on a remote server

and are accessed via the internet. Users can interact with the application through a web interface, which usually consists of web pages designed specifically for the application [24].

Web applications are commonly used in a wide variety of situations, from email and social networking applications to business management and e-commerce systems. Because there is no need to install software on the user's computer, web applications are easy to use and accessible from anywhere with an internet connection. Additionally, web applications can be updated and improved without requiring users to download and install updates on their computers, making them more convenient for developers and users [24].

### 2.6 Mobile Application

A mobile application is one that is developed specifically for a particular operating system, known as a Software Development Kit or SDK. Each platform, such as Android, IOS, or Windows Phone, has a distinct system and requires downloading and installation, and needs to be updated by the user [25].

Technology plays a very important and significant role in the healthcare sector, often being decisive in the processes of sample collection or diagnosis development. Therefore, an essential part of clinical laboratory management is the incorporation of technologies that are suitable for procedures and serve as support in the development of medical services [26].

A mobile application (also known as an "app") is software designed to run on mobile devices such as smartphones, tablets, and smartwatches. Mobile applications are designed to perform various functions and offer different services, from social networks and games to productivity and finance applications. These applications can be downloaded and installed from application stores such as Apple's App Store or Android's Google Play Store. Mobile applications can also be native, designed specifically for a mobile operating system, or they can be web-based, cloud-based, and accessible through a web browser on a mobile device.

## 3 Construction of the Height and Heart Rate Meter

The system structure is modeled based on the Client-Server Architecture as shown in Fig. 1. The process starts from the client, where Arduino detects the height and heart rate, and establishes a connection with the server. If communication is successful, Arduino sends a request via URL using the HTTP protocol with the obtained data, establishing a connection with the database, to subsequently save patient information in the mobile application. Similarly, users can interact on the web and mobile application through various graphical interfaces, making queries on the web service, linked to the database hosted on the server.

The electronic components used in the hardware architecture are arduino nano or uno, HC SR04 ultrasonic sensor, LED display, buzzer, heart rate sensor, 9V battery + connectors, and HC-06 Bluetooth module. Figure 2 shows the electronic components used to make the microcontroller connection.

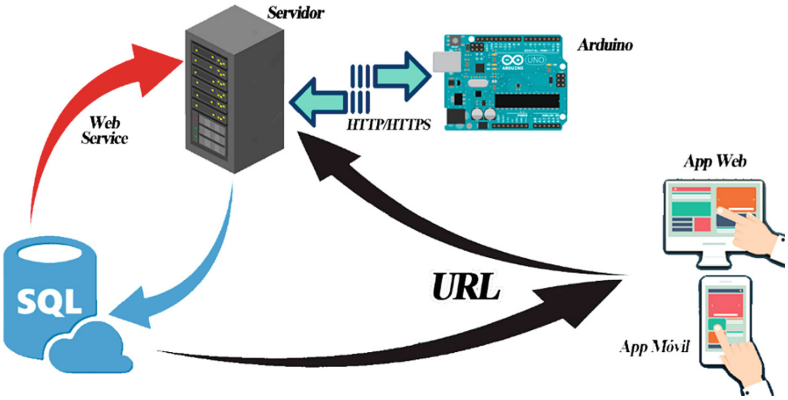


**Fig. 1.** System architecture [27].

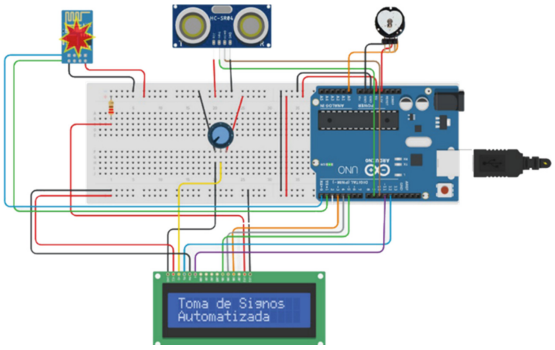


**Fig. 2.** Connection of the microcontroller with all the devices [27].

The following is the configuration of the microcontroller.
Heart Rate Sensor Library.

```
#include <PulseSensorPlayground.h>
```

Led Display Library.

```
#include <LiquidCrystal.h>
LiquidCrystal lcd(12, 11, 5, 4, 3, 2);
int led=13;
char buffer[10];
```

Heart rate sensor variables.

```
int PulseSensor = A0; // Conecte el cable rojo del sensor
en pin analógico cero
int Signal = 0;
float sensorvalor;
```

Distance sensor variables.

```
#define pEcho 10  //Conecta pin echo
#define pTrig 9  //Conecta el trigger
int duracion;  //Captura el pulso que emite el echo
int duracion1;
int ultrasonico=0; //Captura la distancia
void setup()
{
```

Speed configuration.

```
  lcd.begin(16,2);
  Serial.begin(9600);      //Inicia la velocidad en 9600
baudios
  pinMode(pEcho, INPUT);
  pinMode(pTrig, OUTPUT);
```

Pin declaration.

```
   pinMode(led,OUTPUT);
   digitalWrite(led,LOW);
   lcd.setCursor(0,0);// col fila
   lcd.print("Toma de Signos");
    lcd.setCursor(0,1);// col fila
   lcd.print("Automatizada");
   delay(3000);
   lcd.clear();
   }
 float lectura_ultrasonico()
 {
```

Sending low pulse to trigger.

```
   digitalWrite(pTrig, LOW);
```

2 μs delay,

```
   delayMicroseconds(2);
```

Generates trigger pulse.

```
digitalWrite(pTrig, HIGH);
```

10 μs delay

```
            delayMicroseconds(10);
            digitalWrite(pTrig, LOW);
            duracion=pulseIn(pEcho, HIGH);
            duracion1 =(duracion*0.034) /2;
            ultrasonico= 180 - duracion1;
            return ultrasonico;
}
float lectura_sensor()
{
```

Reading data from heart rate sensor

```
    Signal = analogRead(PulseSensor);
    if(Signal <= 360){
     sensorvalor = sensorvalor-sensorvalor;
     }else{
       sensorvalor = (Signal/10) +25;
       delay(500);
       }
      delay(100);
           return sensorvalor;

   }
   void loop()
   {
```

Storing data sent from functions

```
int dist = lectura_ultrasonico();
int puls = lectura_sensor();
sprintf(buffer, "%d,%d",puls,dist);
Serial.println(buffer);
lcd.setCursor(0,0);
lcd.print("Pulso = ");
lcd.print(puls);
lcd.print("  LPM");
lcd.setCursor(0,1);//col fila
lcd.print("Altura = ");
lcd.print(dist);
lcd.print("  CM");
delay(1000);
lcd.clear();
}
```

Figure 3 shows the connection of the HC-06 Bluetooth module with Arduino. The selection of this module is due to its signal coverage being suitable for the construction of the meter.

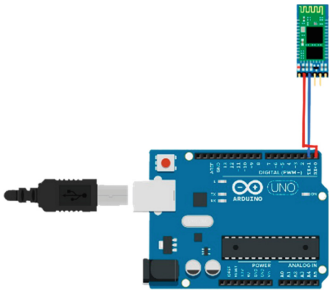

**Fig. 3.** Connection of the HC-06 Bluetooth module with Arduino [27].

The graphical interfaces of the mobile application were created in App Inventor. Meanwhile, the web application is developed using Bootstrap, PHP, MySQL, and Ajax.

## 4 Results

Figure 4 shows the processing and storage of information collected by the devices. The information is recorded in the database after laboratory workers carry out the customer care process based on the data captured by the height and heart rate meter.

The mobile application allows authorized healthcare personnel to register vital signs and search for patients to record vital signs.

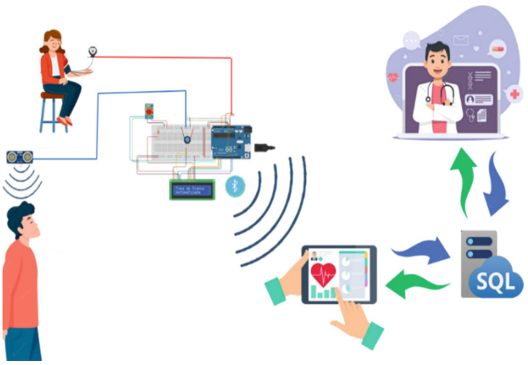


**Fig. 4.** Project Infrastructure [27].

The administrator must search for the patient by entering their ID number and then record pulse and height measurements as shown in Fig. 5. For this, the patient is placed under the height sensor as shown in Fig. 6. Once the data has been taken, a one-minute wait is required before capturing and storing the data in the application.

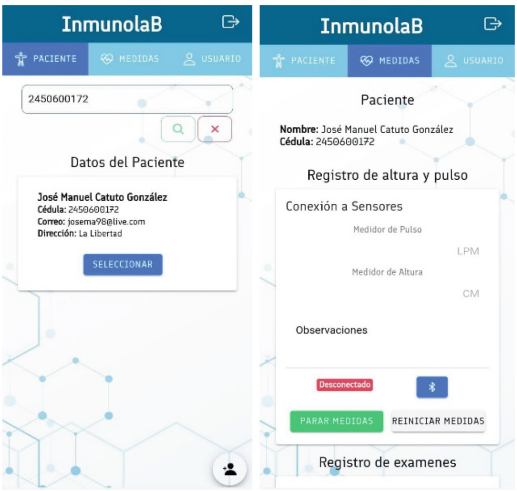


**Fig. 5.** Patient search and sensor registration interface [27].

In the web application, the administrator role can register, update, and delete user data, as well as view reports.

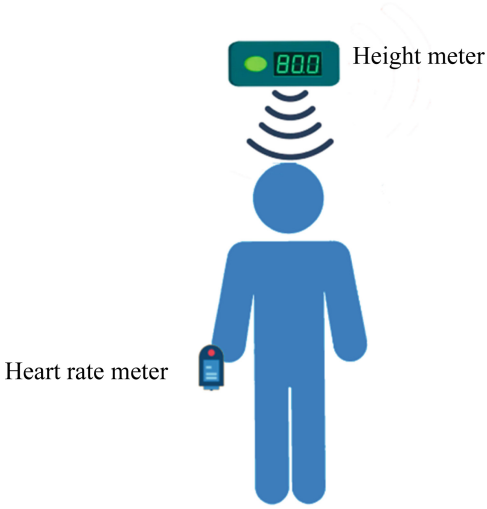


**Fig. 6.** Vital signs measurement scheme [27].

## 5 Conclusions

By complementing the clinical laboratory with an automated height and heart rate meter, a better control and organization of patient measures and exams was achieved, maintaining an adequate distance to prevent contagion.

The height and heart rate meter were designed using the Arduino Uno microcontroller, which sends information by connecting via Bluetooth to a mobile application, storing the patient's vital signs.

The administrative process of the clinical laboratory was improved. To determine this, the time it takes for users to register the patient, height, and heart rate was calculated, concluding that waiting times are reduced by 40%, contributing to the management of said procedure.

If new functionalities are desired for the systems, it is recommended to review the tools used in this project since if other programs are used, there may be compatibility issues.

Migration of the applications to a permanent web server is recommended to always have access to information and places since it is currently on a free server.

Creating a pulse meter using Arduino can be an interesting and useful project to learn about programming and electronics. By using a pulse sensor and an Arduino microcontroller, it is possible to measure a person's heart rate and display it on an LCD screen or mobile application.

Additionally, this project can be customized and improved to fit different needs and requirements. For example, alarms can be added to indicate when the heart rate is too high or too low, or a data logging function can be added to track changes in heart rate over time.

Creating a pulse meter using Arduino can also be an excellent way to foster creativity and innovation and can serve as a foundation for more advanced projects in the future.

## References


1. Jeong, D.-Y., et al.: Digital twin: technology evolution stages and implementation layers with technology elements. IEEE Access **10**, 52609–52620 (2022). https://doi.org/10.1109/ACCESS.2022.3174220
2. Huang, C., Yang, L., Pan, J., Xu, X., Peng, R.: Correlation between vaccine coverage and the COVID-19 pandemic throughout the world: based on real-world data. J. Med. Virol. **94**(5), 2181–2187 (2022). https://doi.org/10.1002/jmv.27609
3. Ciotti, M., Ciccozzi, M., Terrinoni, A., Jiang, W.-C., Wang, C.-B., Bernardini, S.: The COVID-19 pandemic. Crit. Rev. Clin. Lab. Sci. **57**(6), 365–388 (2020). https://doi.org/10.1080/10408363.2020.1783198
4. Antonini, M., et al.: An analysis of the COVID-19 vaccination campaigns in France, Israel, Italy and Spain and their impact on health and economic outcomes. Health Policy Technol. **11**(2), 100594 (2022). https://doi.org/10.1016/j.hlpt.2021.100594
5. Lustosa Rosario, A.C., et al.: "Open configuration options Higher Education Digital Transformation in Latin America and the Caribbean," Washington, D.C., December 2021. https://doi.org/10.18235/0003829
6. Razdan, S., Sharma, S.: Internet of medical things (IoMT): overview, emerging technologies, and case studies. IETE Tech. Rev. **39**(4), 775–788 (2022). https://doi.org/10.1080/02564602.2021.1927863
7. Brem, A., Viardot, E., Nylund, P.A.: Implications of the coronavirus (COVID-19) outbreak for innovation: which technologies will improve our lives? Technol. Forecast. Soc. Change **163**, 120451 (2021). https://doi.org/10.1016/j.techfore.2020.120451
8. Davila, M.I., Lewis, G.F., Porges, S.W.: The PhysioCam: a novel non-contact sensor to measure heart rate variability in clinical and field applications. Front. Publ. Health **5** (2017). https://doi.org/10.3389/fpubh.2017.00300
9. Abuella, H., Ekin, S.: Non-contact vital signs monitoring through visible light sensing. IEEE Sens. J. **20**, 3859–3870 (2019). https://doi.org/10.1109/JSEN.2019.2960194
10. An, J.Y., Shin, H.J., Yang, M., Park, D.-Y., Yang, J., Kim, H.J.: Non-contact diagnosis of sleep breathing disorders using infrared optical gas imaging: a prospective observational study. Sci. Rep. **12**(1), 21052 (2022). https://doi.org/10.1038/s41598-022-25637-w
11. Monk, S.: Programming Arduino: Getting Started with Sketches, 1st edn. McGraw-Hill Education, New York (2012). https://www.accessengineeringlibrary.com/content/book/9780071784221
12. Singh, R.: Internet of Things with Raspberry Pi and Arduino (2020)
13. Mohd Aman, A.H., Hassan, W.H., Sameen, S., Attarbashi, Z.S., Alizadeh, M., Latiff, L.A.: IoMT amid COVID-19 pandemic: application, architecture, technology, and security. J. Netw. Comput. Appl. **174**, 102886 (2021). https://doi.org/10.1016/j.jnca.2020.102886
14. Kondaveeti, H., Mathe, S.: A systematic literature review on prototyping with Arduino: applications, challenges, advantages, and limitations. Comput. Sci. Rev. **40** (2021). https://doi.org/10.1016/j.cosrev.2021.100364
15. Mihat, A., Mohd Saad, N., Shair, E.F., Aslam, A.B.N., Abdul Rahim, R.: Smart health monitoring system utilizing internet of things (IoT) and Arduino. Asian J. Med. Technol. **2**(1), 35–48 (2022). https://doi.org/10.32896/ajmedtech.v2n1.35-48
16. Aldujaili, A.A., Dauwed, M., Meri, A., Abduljabbar, S.S.: Smart internet of things kindergarten garbage observation system using Arduino uno. Int. J. Electr. Comput. Eng. (IJECE) **12**(6), 6820 (2022). https://doi.org/10.11591/ijece.v12i6.pp6820-6828
17. Kaplan, B.: Initial impact of a clinical laboratory computer system. J. Med. Syst. **11**(2–3), 137–147 (1987). https://doi.org/10.1007/BF00992348

18. Sivasankar, G., Anand, A.P., Susela Sruthi, K.: Internet of Things based wearable smart gadget for COVID-19 patients monitoring. In: 2022 International Conference on Wireless Communications Signal Processing and Networking (WiSPNET), pp. 130–134. IEEE, March 2022. https://doi.org/10.1109/WiSPNET54241.2022.9767173
19. Omboni, S., et al.: The worldwide impact of telemedicine during COVID-19: current evidence and recommendations for the future. Connect. Health **1**, 7-35 (2022). https://doi.org/10.20517/ch.2021.03
20. Heng, W., Solomon, S., Gao, W.: Flexible electronics and devices as human-machine interfaces for medical robotics. Adv. Mater. **34**(16), 2107902 (2022). https://doi.org/10.1002/adma.202107902
21. Vavrinsky, E., et al.: The current state of optical sensors in medical wearables. Biosensors (Basel) **12**(4), 217 (2022). https://doi.org/10.3390/bios12040217
22. van de Sande, D., et al.: Developing, implementing and governing artificial intelligence in medicine: a step-by-step approach to prevent an artificial intelligence winter. BMJ Health Care Inform. **29**(1), e100495 (2022). https://doi.org/10.1136/bmjhci-2021-100495
23. Kolecki, R., et al.: Assessment of the utility of Mixed Reality in medical education. Transl. Res. Anat. **28**, 100214 (2022). https://doi.org/10.1016/j.tria.2022.100214
24. Pelet, J.-É., (ed.): Advanced Web Applications and Progressing E-Learning 2.0 Technologies in Higher Education. IGI Global (2019). https://doi.org/10.4018/978-1-5225-7435-4
25. Li, X., Zhao, X., (Ato) Xu, W., Pu, W.: Measuring ease of use of mobile applications in e-commerce retailing from the perspective of consumer online shopping behaviour patterns. J. Retail. Consum. Serv. **55**, 102093 (2020). https://doi.org/10.1016/j.jretconser.2020.102093
26. Drew, D.A., et al.: Rapid implementation of mobile technology for real-time epidemiology of COVID-19. Science **368**(6497), 1362–1367 (2020). https://doi.org/10.1126/science.abc0473
27. Gonzáñez, J.C.: Elaboración de un medidor de altura y pulso cardiaco para evitar el contacto físico en la toma de signos vitales en el laboratorio clínico Inmunolab en tiempos de COVID19. Universidad Estatal Península de Santa Elena, La Libertad (2022)