A Hybrid Genetic Algorithm for Optimal Active Power Curtailment Considering Renewable Energy Generation

André Pedroso[1,3], Yahia Amoura[1,2], Ana I. Pereira[1], and Ângela Ferreira[1(✉)]

[1] Research Centre in Digitalization and Intelligent Robotics (CeDRI), Instituto Politécnico de Bragança, Bragança, Portugal
{andre.pedroso,yahia,apereira,apf}@ipb.pt
[2] University of la Laguna, Santa Cruz de Tenerife, Spain
[3] Federal University of Technology - Paraná, Curitiba, Brazil

Abstract. This paper analyzes the application of a population-based algorithm and its improvement in solving an optimal power flow problem. Simulations were performed on a 14-bus IEEE network modified to include renewable energy sources-based power plants: a wind park and two photovoltaic solar parks. In this scenario, the high penetration of intermittent energy sources in the grid makes it necessary to curtail active power during peak generation to maintain the balance between load and generation. However, European energy market regulations limit the annual curtailment of RES generators and penalize discriminatory curtailment actions between generators. This work exploits the minimization of transmission active loss while respecting its security constraints. Additionally, constraints were introduced in the optimal power flow problem to mitigate active power curtailment of the renewable source generators and to secure a non-discriminatory characteristic in curtailment decisions. The non-convex nature of the problem, intensified by the introduction of non-linear constraints, suggests the exploitation of heuristic algorithms to locate the optimal global solution. The obtained results demonstrate that a hybrid GA algorithm can improve convergence speed, and it is useful in determining the problem solution in cases where deterministic algorithms are unable to converge.

Keywords: Energy curtailment · Optimal power flow · Genetic algorithm · Interior point · Active-set

1 Introduction

The optimal settings of control variables within an electrical power network in order to minimize the operating cost of the system while ensuring its stable and reliable operation are performed through an Optimal Power Flow (OPF) [1]. The method is used to expedite accessible generation plants in a way that minimizes a

© The Author(s), under exclusive license to Springer Nature Switzerland AG 2023
O. Gervasi et al. (Eds.): ICCSA 2023 Workshops, LNCS 14105, pp. 479–494, 2023.
https://doi.org/10.1007/978-3-031-37108-0_31

specific objective function. OPF can completely represent the network conditions and nodal control balance [2]. It also keeps up limits on transport voltage, branch power flows, and generator yields. Standard OPF definitions incorporate minimizing operating costs, optimizing the allocation of resources, and minimizing network losses [3]. Other objectives have been introduced, for instance, to reduce the environmental impact of power generation [4] and maximize renewable penetration in the distribution grid [5]. The contribution of the work presented in this paper tackles the optimization of active power curtailments. The algorithms used to solve OPF issues include both numerical programming procedures and heuristic optimization.

Since it was first presented by Carpendier in 1962 [6], OPF methods have been widely studied and applied within the power systems field, especially due to their capacity to achieve economic efficiency and maintain a safe and robust power system operation. Additionally, the current deregulation of the energy market and the introduction of new technologies, such as Flexible AC Transmission Systems (FACTS), are impacting the behavior of the grid, making necessary fast and reliable methods to estimate the future state of the system and define the best operational decisions, for instance, in the day ahead OPF methods, which makes OPF even more relevant nowadays [7].

Commonly, the OPF is defined as a non-convex optimization problem, from which the optimal solution can be trapped by local minima. According to several purposes that may be used to solve an application by the standard OPF, which majority include nonlinear constraints, achieving global optimality is the main goal, which requires robust optimization algorithms [8].

To simplify the problem and achieve a globally optimal solution, some solvers implement the DC-OPF, which neglects the transmission losses, and considering the magnitudes of the voltages constant, the reactive power flow is neglected, and only the active power flow is considered. In this way, the number of variables that need to be optimized is reduced, and the problem becomes linear and can be solved by linear programming solvers [9].

The available approaches that have been applied to the purpose of optimizing the OPF consist mainly of two categories, including the deterministic and/or evolutionary algorithms [10]. Deterministic optimization algorithms consist of quadratic programming (QP), Non-Linear Programming (NLP), and the interior point (IP) method, among others. However, these methods may have trouble dealing with multiple local minima, given the non-convexity of the OPF problems. As a consequence of the limitations of deterministic methods, evolutionary approaches like the Genetic Algorithm (GA) and Particle Swarm Optimisation (PSO) are being proposed as suitable candidates for addressing the OPF problem. Genetic algorithms represent a robust approach for solving these types of optimization problems since their global search mechanisms are more consistent in converging to the global solution. Additionally, the GA does not need to assume that the search space is discrete or continuous because it evaluates multiple points in the entire parameter space simultaneously, strictly based on the objective function.

The optimization approaches proposed above have been widely used. However, in [11], an effective Mixed-Integer Genetic Algorithm (MIGA) was presented to solve non-convex OPF problems with security limitations. Concurring with the numerical studies on 26-bus and the IEEE 57-bus systems, the MIGA performs better than the single evolutionary approach based on the GA. A novel hybrid method integrating a GA with a nonlinear Interior Point Method (IPM) was used for solving the OPF problem in [12]. In the hybrid approach, GA is responsible for solving the discrete optimization with the continuous variables, and the IPM is responsible for solving the continuous optimization with the discrete variables. Numerical computations were implemented on IEEE 30-bus, IEEE 118-bus, and realistic Chongqing 161-bus test systems. In [13], the Newton-Raphson algorithm for the minimization of the mismatch of the power flow equations was integrated into the PSO algorithm. PSO was applied for the transient-stability-constrained OPF problem modeled as an extended OPF with additional rotor angle inequality constraints. A hybrid Tabu Search and Simulated Annealing (TSSA) approach was proposed in [14] to deal with OPF control with FACTS devices. The results from an IEEE 30-bus system demonstrate that the proposed hybrid TSSA approach can perform better than GA, SA, or TS alone. Differential Evolution (DE) based approach was used to solve the OPF problem with multiple and competing objectives in [15]. The OPF problem was divided into two sub-problems, including active power dispatch and reactive power dispatch.

Furthermore, the high penetration of renewable energy sources (RES) power generation in the electric grid, predominantly photovoltaic and wind power plants, is affecting the OPF problem complexity. The non-dispatchable nature of these generators is impacting the grid generation profile, causing network congestion and jeopardizing grid stability and operation planning [16].

In moments of high energy production and low consumption, operators may have to curtail part of the generation in order to achieve the energy balance or even to maintain grid stability. To avoid large values of RES curtailment, which can be considered energy waste and may discourage new investors in the renewable energy field, European market regulation specified that the maximum annual RES energy curtailment should not exceed 5% of the generator's annual maximum production and it is determined that curtailment must be non-discriminatory between the generators [21].

Many approaches were proposed to mitigate the occurrence of these events, especially in countries that encouraged the high implementation of RES generation, for instance, deploying demand response programs to incentivize consumers to reduce their energy usage during periods of high demand or resort storage systems. One of the most efficient approaches is the use of pumped hydro energy storage when there is an excess of RES-based electricity. In this way, the water is stored in an upper reservoir until load peak hours, at which point the potential energy of water is converted into electrical energy. However, given the necessary infrastructure, pumped hydro storage can have a considerable environmental impact and be expensive. Hence, well-planned energy cur-

tailment can avoid unnecessary system expansion, which is usually an expensive and long-term project [20].

The non-discriminatory curtailment behavior among the generators is addressed in this work by introducing a new nonlinear constraint into the OPF problem. The results indicate that this constraint increases the complexity of the problem, and a deterministic algorithm becomes less efficient and has problems converging to a solution when the additional constraint is active. By applying a GA hybrid algorithm, the speed of response and the convergence rate of the algorithm are improved.

This section introduced the state of the art regarding the OPF problem and defined the contribution of the work developed in this paper. Section 2 details the OPF problem formulation: first, the standard formulation is defined, followed by the modified version, which includes the additional constraint. Section 3 shows the case study built to test the paper's proposition. Section 4 presents the optimization approaches used in the work. Section 5 presents and discusses the achieved results. Finally, Sect. 6 concludes the study and proposes a guideline for future works.

2 Optimal Power Flow

The Optimal Power Flow (OPF) topic is an extension of the Power Flow (PF) circumstance, where system variables, including bus parameters, are used to assess the conditions of an electric grid. To build an optimal power flow system, the context is formulated as a minimization optimization problem in which the constraints are subject to equality and inequality restrictions that make the problem more complex to solve by applying conventional power flow solutions. The constraints characterize the bus parameters such as voltage, magnitude, and active and reactive power. The optimization process aims to minimize power system-related issues, including total network losses, voltage deviation, and generation cost, among others. This study aims to minimize network losses. The computational optimization problem and the corresponding constraints are defined hereinafter.

2.1 Standard OPF

The standard optimal power flow can be formulated as a uni-objective optimization problem with a minimization purpose, as follows:

$$\begin{aligned} \min \quad & f(x) && (1)\\ s.t \quad & g(x) = 0 && (2)\\ & h(x) \leq 0 && (3) \end{aligned}$$

where $f(x)$, $g(x)$, and $h(x)$ represent the objective function that must be minimized, equality constraints, and inequalities constraints, respectively. Vector x

is defined by the standard power flow problem's variables, i.e., bus voltage magnitudes and phases, active and reactive injected power in the slack bus, and the latter also for the PV bus.

Equality Constraints. As mentioned, the nonlinear equality constraints are the cause of the complexity of solving the OPF problem. Its standard formulation is represented as:

$$P_i = \sum_{k=1}^{N} |V_i||V_k||Y_{ik}|cos(\theta_i - \theta_k - \delta_{ik}) \tag{4}$$

$$Q_i = \sum_{k=1}^{N} |V_i||V_k||Y_{ik}|sin(\theta_i - \theta_k - \delta_{ik}) \tag{5}$$

where P_i and Q_i are the results in active and reactive power injected at the bus i, $|V_i|$, $|V_k|$, θ_i and θ_k, are the voltage magnitude at buses i and k and their angles, $|Y_{ik}|$ and δ_{ik} are the admittance's magnitude and angle of the branch ik and N is the number of generation buses [9].

These equations are known as the polar form of alternating current power flow (AC-PF) equations. In some cases, they are represented by their algebraic version or DC form. The latter has the great benefit of being linear and, therefore, can easily converge to the optimal solution of the problem because it makes the optimization system convex. However, this method may not fully represent the power system dynamics since it is a simplification of the AC version and cannot address the problem of minimizing network losses.

Inequalities Constraints. The capacity to formulate and solve a problem considering its limitations is one of the great advantages of using optimization. In the OPF problem, these limits are embedded in the inequalities constraints. These limits represent the security operating values that the variables can achieve without damaging the grid or undermining its stability. OPF standard inequalities constraints are:

$$\theta_{min} \leq \theta_i \leq \theta_{max} \tag{6}$$

$$V_{min} \leq V_i \leq V_{max} \tag{7}$$

$$P_{min} \leq P_i \leq P_{max} \tag{8}$$

$$Q_{min} \leq Q_i \leq Q_{max} \tag{9}$$

$$S_{min} \leq S_{ik} \leq S_{max} \tag{10}$$

where S_{ik} represents the apparent power flow through the line between the bars i and k, computed as $|V_i Y_{ii}|e^{j(-\delta_{ii})} + |V_i V_k Y_{ik}|e^{j(\theta_i + \theta_k - \delta_{ik})}$, in which $j = \sqrt{-1}$.

2.2 Active Power Curtailment

To evaluate active power curtailment, different procedures have already been used in the literature. In [18], the operation problem of mitigating active power

curtailment was managed by forecasting the curtailment and defining the buses with a higher impact in this aspect within the system. Regarding the discriminatory nature of curtailment, the work performed in [17] added penalizing terms to generators with high energy curtailment, and authors in [19] used power distribution factors in the OPF problem. In both methods, DC-OPF was employed, which ensures a solution to the problem.

In this paper, the renewable energy curtailment is represented by the value of energy that is not being used concerning the maximum energy available for dispatch in the generator at the moment. This is formulated as:

$$C_s = \frac{P_s^{max} - P_s}{P_s^{max}} \tag{11}$$

in which P_s is the vector containing the generation power of the RES plants, P_s^{max} the maximum available power at the generator, being s the bus number in which the renewable energy generation parks are located. Since the European regulation limits the curtailment to 5% of the annual production of the generator, the following inequality is added to the OPF problem:

$$C_s \leq 0.05 \tag{12}$$

The active power curtailment discrimination can be formulated by the standard deviation of the total energy curtailed at each RES generator:

$$D = \sqrt{\frac{\sum_{i \in s} (E_i - M_c)^2}{N_s}} \tag{13}$$

where E_i is the total energy curtailed from generator i, computed as:

$$E_i = \frac{\sum_{k=0}^{T} (P_s^{max}(k) - P_s(k))}{\sum_{k=0}^{T} P_s^{max}(k)} \tag{14}$$

M_c is the mean value of the vector E_s, N_s is the number of RES generators connected to the grid, and T is the number of time steps for which the OPF problem was evaluated.

3 Case Study

The electric grid used to test the proposed algorithms is the IEEE 14-bus example grid, illustrated in Fig. 1. The grid is an approximation of the American electric power system as of February 1962 [22]. IEEE 14-bus contains 5 generator buses and 11 load buses. In order to include RES generation in the model, three generators, represented in the figure as Gen 3, Gen 6, and Gen 8, were replaced by non-dispatchable energy sources. Gen 3 is a 100 MW wind park, and the latter are solar parks with capacities of 70 MW and 100 MW, respectively.

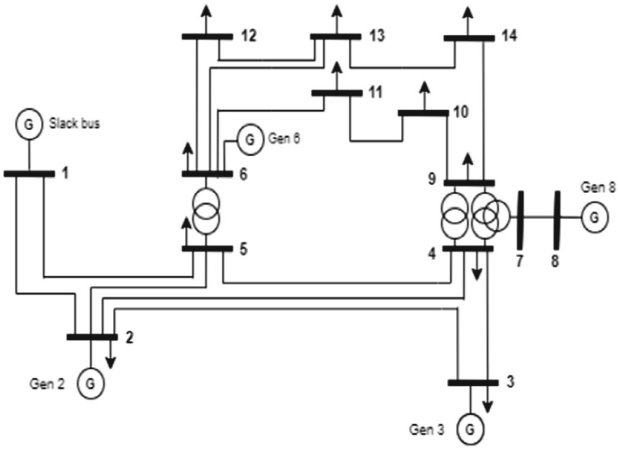

Fig. 1. IEEE 14-bus grid model representation.

3.1 Load and Generation Profiles

In order to simulate the curtailment over a whole year, four case scenarios, representing typical day conditions of a season, were designed to model the load and generation at different moments of the year.

The load at each bus was defined by using a dataset of real residential and industrial site load profiles [23]. The values of the data set were scaled to fit the original 14-bus model's load magnitude.

Solar and wind power generation is predominantly dependent on weather conditions; therefore, to estimate these values, it was used 20-year weather data from the city of Bragança in Portugal, available in [24]. The data set includes wind speed, solar irradiance, and temperature, which are the most influential variables in terms of forecasting or estimating solar and wind power generation.

An hourly data vector for one year was created by calculating the average value of the variables in the dataset. Four case scenarios were selected from this vector to represent a typical day for a specific period of the year. The year is divided as follows:

1. November, December and January;
2. February, March and April;
3. May, June and July;
4. August, September and October.

After defining the benchmark cases, the power at each RES generator was calculated by the mathematical model of the wind and solar park generation. The power supplied by the solar parks is computed as follows:

$$P_{pv}(G) = \eta \cdot S \cdot G \tag{15}$$

where P_{pv} is the individual cell dispatched power, η is the efficiency coefficient of each cell, S is the surface of the photovoltaic module and G the irradiation value at that moment.

The wind park's hourly power production can be represented as follows:

$$\begin{cases} P_{wd} = 0, & v \leq v_d \text{ or } v \geq v_c \\ P_{wd}(v) = P_n(\frac{v - v_d}{v_n - v_d}), & v_d \leq v \leq v_n \\ P_{wd} = P_n, & v_n \leq v \leq v_c \end{cases} \tag{16}$$

in which P_{wt} is the power delivered by the turbine, v_d the cut-in velocity, v_c the cut-out velocity, v_n the rated velocity and P_n the turbine rated power [25].

In order to scale the production with acceptable values by the system operation,

$$P_{pv}^{park} = N_{cell} P_{pv} \tag{17}$$

$$P_{wd}^{park} = N_{turbine} P_{wd} \tag{18}$$

where P_{pv}^{park} and P_{wd}^{park} are the solar and wind park power generation and N_{cell} and $N_{turbine}$ are the number of PV modules and the number of wind turbines, respectively.

To demonstrate that the curtailment is present in the designed cases, the total load and RES generation of the first case scenario is displayed in Fig. 2. The excess generation between 9:00 and 15:00 will activate the constraints related to active curtailment, represented in Eqs. (12) and (13).

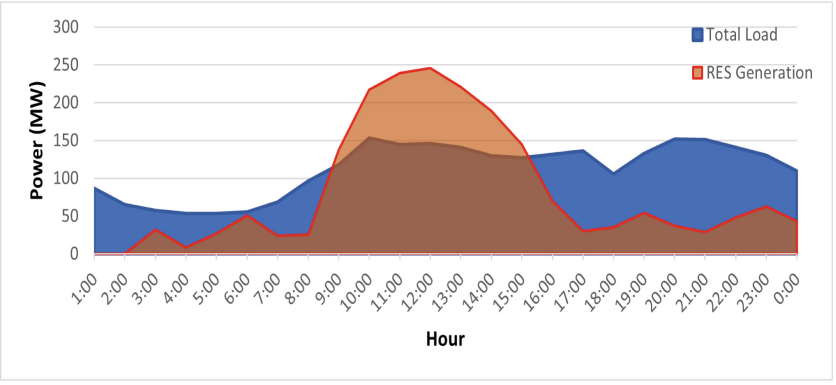

Fig. 2. First case scenario total load and generation values through the day.

3.2 Objective Function

The objective function is specified in (1) by the function $f(x)$, which will guide the algorithm's decisions. As mentioned, the main objective of the OPF problem defined in this paper is to minimize network active losses while considering

standard constraints and the limits on active power curtailment. This objective function is well-suited to the case scenario since the limitation on active curtailment is detrimental to grid efficiency. Therefore, the system should operate as close as possible to the constraint limits in order to mitigate active losses. Since no flexible load is connected to the grid, the total active losses are equal to the sum of the active injected power at all buses [26]. In this case, the objective function can be defined as,

$$f(x) = \sum_{i=1}^{N} P_i \tag{19}$$

The limit values for the inequality constraints applied to the OPF problem are defined in Table 1, considering that the base value of apparent power in the case study is equal to 100 MVA.

Table 1. Values of OPF inequality constraints.

Variables	Lower bounds	Upper bounds
V_i (p.u)	0.95	1.05
θ_i (°)	−60	60
S_{ik} (p.u)	–	1.0
P_2 (p.u)	0.4	0.4
Q_2 (p.u)	−0.4	0.5
P_s (p.u)	0	P_s^{max}
D	–	0.01

4 Optimization Approaches

Three optimization approaches have been used to optimize the active power curtailment, two of them using deterministic algorithms and the third one exploiting a hybrid optimization procedure.

4.1 Deterministic Optimization Method Based on Interior Point Algorithm

The interior point method (IPM) is used to find the optimal solution to an optimization problem by moving from one point on the objective function to another point in the interior of the feasible region. The application of the IPM is employed to obtain the solution to the nonlinear optimal power flow (OPF) problem [27]. These types of methods combine simplicity in the treatment of inequality constraints with efficient computational performance. These characteristics have been the subject of extensive theoretical research. Several strategies were proposed for an OPF with active power dispatching and voltage security

using an IPM that proved to be robust, especially in large networks, as the number of iterations increased slightly with the number of constraints and network size [28]. The latter greatly reduces the number of iterations necessary to obtain the optimal solution. Both methods that were described are implemented in the IPM problem. Nonlinear IPM techniques are applied to the solution of diverse OPF market problems [29]. The OPF-based approach is basically a non-linear constrained optimization problem and consists of a scalar objective function and a set of equality and inequality constraints.

4.2 Deterministic Optimization Method Based on Active Set Algorithm

The active-set method is an algorithm used to identify the active constraints in a set of inequality constraints. The active constraints are then expressed as equality constraints, thereby transforming an inequality-constrained problem into a simpler equality-constrained sub-problem [31].

4.3 Hybrid Optimization Based on Genetic Algorithm and Active Set

Genetic algorithms (GA) belong to the class evolutionary algorithms. Genetic algorithms are efficient stochastic-based search algorithms based on the principles of natural selection and natural genetics. This method is based on a population of potential solutions. The mode of operation is based on the biological principles of natural selection, which coordinate the survival of the samples that are best adapted to their environment [34]. The GA starts with a set of solutions randomly initialized in space. The individuals here are represented by their design variables, named chromosomes. The chromosomes of the initial population are used to produce a new population, going through the different genetic operators, mainly crossover, mutation, and selection. This is motivated by the expectation of creating a new population better than the previous one [35]. In this work, the initial chromosomes are associated with each active power injected (P_i) by the generators in the system. A starting population is generated with the vector of (P_i) and these chromosomes constitute the basis of the research space (starting population). In the reproduction process, the chromosomes representing the possible combinations of P_i solutions are assessed based on the objective function. The best chromosomes will have the highest probability of being the parental candidate for optimization problem solutions. These successful chromosomes (sets of P_i) are then taken forward to the crossover process. Then the new set of chromosomes (the best sets of P_i until this stage) is subjected to the mutation process by enabling new genetic characteristics on the chromosome, preventing the premature stopping of the algorithm in a local solution [32,33].

The optimization approach is explained in Fig. 3.

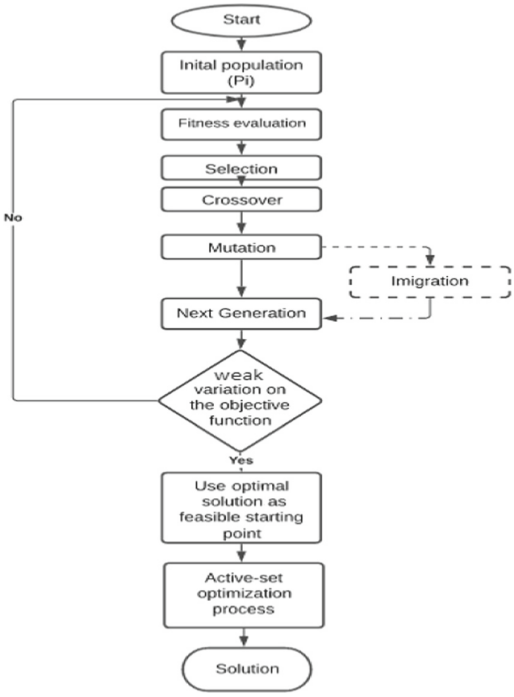

Fig. 3. OPF optimization using hybrid GA/Active-set algorithm flowchart.

5 Results and Discussion

The algorithms' performances were evaluated by their CPU time and capacity to converge to a feasible solution when running the OPF problem for the four scenarios that were previously presented. Since each scenario represents a period of the year, they were computed sequentially from 1 to 4. Thus the curtailed value is updated into the constraint represented by Eq. (13). As the OPF problem was analyzed for each hour of the exemplary days, in each case the algorithms were evaluated 24 times.

In an initial analysis, the algorithms have been exploited by considering only the standard OPF problem constraints and the curtailment linear constraint, formulated in (12). In order to verify the time of convergence, the four case scenarios were evaluated individually, and the total time was recorded, as shown in Table 2.

Table 2. CPU time to converge to the OPF feasible solution.

Case	Active-set (s)	Interior Point (s)	Hybrid GA (s)
1	22.36	31.25	18.96
2	15.88	35.23	17.39
3	23.91	31.50	21.71
4	15.90	31.96	17.86
Total	78.05	129.94	75.92

From the obtained results, the hybrid GA algorithm was faster than the deterministic approaches in general. Regarding the objective function, both deterministic and heuristic approaches were able to converge on the optimal solution.

In a second analysis, characterized by adding the constraint related to non-discriminatory curtailment, as formulated in (13), the hybrid GA was the only algorithm able to achieve the optimal solution in all cases. Both the active-set and interior-point algorithms were unable to converge for an optimal feasible solution in some computations, which prevented the algorithm from determining the optimal set points required by the optimization process. To reach the final decision on power curtailment, all submitted parameters must complete the optimization process for the whole simulation day, which was not accomplished by the optimization process in cases 3 and 4. The results are shown in Table 3.

Table 3. Feasible solution convergence.

Case	Active-set	Interior Point	Hybrid GA
1	Converge	Not converge	Converge
2	Not converge	–	Converge
3	–	–	Converge
4	–	–	Converge

To verify whether the operating conditions required by curtailment regulation were satisfied, the annual RES active power curtailment was calculated by combining the results found in each case scenario. The results are presented in Table 4.

Table 4. Values of OPF inequality constraints.

RES annual maximum energy (MWh)	758452
Annual total load (MWh)	785182
Annual energy losses (MWh)	12157 (1.55%)
DG energy curtailment (MWh)	
G_3	$2.5600 \cdot 10^4$ (4.40%)
G_6	$4.0787 \cdot 10^3$ (4.80%)
G_8	$4.3888 \cdot 10^3$ (4.77%)
Annual total DG curtailment (MWh)	34068 (4.49%)

The results show that the mean curtailment within the renewable source generators was 4,66% of their annual generated power, with a standard deviation of 0.22%; therefore, the constraints added to the problem were satisfied, and the operational requirements were fulfilled. Furthermore, the curtailment values were near their boundaries, which means that the active losses were reduced as much as possible.

6 Conclusion and Future Work

This paper presents an analysis of the application of a GA algorithm to solve the optimal power flow problem in a modified IEEE 14-bus example grid with a high penetration of renewable energy sources. The OPF optimization function seeks to reduce electric grid transmission losses while abiding by the EU energy market regulations' restrictions on the active power curtailment of renewable source generators and its security constraints. To achieve this, non-linear constraints were introduced in the optimal power flow problem, making it necessary to introduce heuristic algorithms to locate the global optimal solution and improve the optimization convergence rate.

Simulation results showed that a hybrid GA algorithm can improve convergence speed and are effective in determining the optimal solution in cases where deterministic algorithms are unable to converge. Therefore, when compared to methods using conventional deterministic algorithms, this approach is effective for solving OPF problems with additional features that increase operational complexity. In future work, the authors intend to extend this research by investigating the effects of other heuristic approaches, such as the Particle Swarm Optimization (PSO) algorithm.

Acknowledgments. The authors are grateful to the Foundation for Science and Technology (FCT, Portugal) for financial support through national funds FCT/MCTES (PIDDAC) to CeDRI (UIDB/05757/2020 and UIDP/05757/2020), SusTEC (LA/P/0007/2021). This work has been supported by NORTE-01-0247-FEDER-072615 EPO - Enline Power Optimization - The supra-grid optimization software.

References

1. Xiong, K., Cao, D., Zhang, G., Chen, Z., Hu, W.: Coordinated volt/VAR control for photovoltaic inverters: a soft actor-critic enhanced droop control approach. Int. J. Electr. Power Energy Syst. **149**, 109019 (2023). https://doi.org/10.1016/j.ijepes.2023.109019
2. Jiao, W., Wu, Q., Huang, S., Chen, J., Li, C., Zhou, B.: DMPC based distributed voltage control for unbalanced distribution networks with single-/three-phase DGs. Int. J. Electr. Power Energy Syst. **150**, 109068 (2023). https://doi.org/10.1016/j.ijepes.2023.109068
3. Grisales-Noreña, L.F., Rosales-Muñoz, A.A., Cortés-Caicedo, B., Montoya, O.D., Andrade, F.: Optimal operation of PV sources in DC grids for improving technical, economical, and environmental conditions by using Vortex Search algorithm and a matrix hourly power flow. Mathematics **11**(1), 93 (2022). https://doi.org/10.3390/math11010093
4. Reddy, S.S., Momoh, J.A.: Minimum emissions optimal power flow in wind-thermal power system using opposition based bacterial dynamics algorithm. In: 2016 IEEE Power and Energy Society General Meeting (PESGM), pp. 1–5, Boston, MA, USA (2016). https://doi.org/10.1109/PESGM.2016.7741635
5. Bhumkittipich, K., Phuangpornpitak, W.: Optimal placement and sizing of distributed generation for power loss reduction using particle swarm optimization. Energy Proc. **34**, 307–317 (2013). https://doi.org/10.1016/j.egypro.2013.06.759
6. Carpentier, J.: Optimal power flows. Int. J. Electr. Power Energy Syst. **1**(1), 3–15 (1979). https://doi.org/10.1016/0142-0615(79)90026-7
7. Tong, X., Zhang, Y., Wu, F.F.: A decoupled semismooth newton method for optimal power flow. In: 2006 IEEE Power Engineering Society General Meeting, pp. 6–pp. Montreal, QC, Canada (2006). https://doi.org/10.1109/PES.2006.1709065
8. Ilyas, M., Alquthami, T., Awais, M., Milyani, A., Rasheed, M.: (DA-DOPF): a day ahead dynamic optimal power flow with renewable energy integration in smart grid. Front. Energy Res. **9**, 696837 (2021). https://doi.org/10.3389/fenrg.2021.696837
9. Frank, S., Steponavice, I., Rebennack, S.: Optimal power flow: a bibliographic survey I. Energy Syst **3**, 221–258 (2012). https://doi.org/10.1007/s12667-012-0056-y
10. Papazoglou, G., Biskas, P.: Review and comparison of genetic algorithm and particle swarm optimization in the optimal power flow problem. Energies **16**(3), 1152 (2023). https://doi.org/10.3390/en16031152
11. Gaing, Z.-L., Chang, R.-F: Security-constrained optimal power flow by mixed-integer genetic algorithm with arithmetic operators. In: 2006 IEEE Power Engineering Society General Meeting, pp. 8-pp. Montreal, QC, Canada (2006) https://doi.org/10.1109/PES.2006.1709334
12. Yan, W., Liu, F., Chung, C.Y., Wong, K.P.: A hybrid genetic algorithm-interior point method for optimal reactive power flow. IEEE Trans. Power Syst. **21**(3), 1163–1169 (2006). https://doi.org/10.1109/TPWRS.2006.879262
13. Mo, N., Zou, Z.Y., Chan, K.W., Pong, T.Y.G.: Transient stability constrained optimal power flow using particle swarm optimisation. IET Gener. Trans. Distrib. **1**(3), 476–483 (2007)
14. Ongsakul, W., Bhasaputra, P.: Optimal power flow with FACTS devices by hybrid TS/SA approach. Int. J. Electr. Power Energy Syst. **24**(10), 851–857 (2002). https://doi.org/10.1016/S0142-0615(02)00006-6

15. Varadarajan, M., Swarup, K.S.: Solving multi-objective optimal power flow using differential evolution. IET Gener. Trans. Distrib.. **2**(5), 720 (2008). https://doi.org/10.1049/iet-gtd:20070457
16. Sinha, P., Paul, K., Deb, S., Sachan, S.: Comprehensive review based on the impact of integrating electric vehicle and renewable energy sources to the grid. Energies **16**(6), 2924 (2023). https://doi.org/10.3390/en16062924
17. Meier, F., Töbermann, C., Braun, M.: Retrospective optimal power flow for low discriminating active power curtailment. In: 2019 IEEE Milan PowerTech, pp. 1–6, Milan, Italy (2019). https://doi.org/10.1109/PTC.2019.8810818
18. Masaud, T.M., Patil, S., Hagan, K., Sen, P.K.: Probabilistic quantification of wind power curtailment based on intra-seasonal wind forecasting approach. In: IEEE Power & Energy Society General Meeting, pp. 1–5, Chicago, IL, USA (2017). https://doi.org/10.1109/PESGM.2017.8274195
19. Wiest, P., Rudion, K., Probst, A.: Optimization of power feed-in curtailment from RES and its consideration within grid planning. In: IEEE Manchester PowerTech, pp. 1–6, Manchester, UK (2017). https://doi.org/10.1109/PTC.2017.7980801
20. Bird, L., et al.: Wind and solar energy curtailment: a review of international experience. Renew. Sustain. Energy Rev. **65**, 577–86 (2016). https://doi.org/10.1016/j.rser.2016.06.082
21. European Commission, "Regulation (EU) 2019/943 of the European Parliament and of the Council of 5 June 2019 on the internal market for electricity(02019R0943 - EN - 23.06.2022)", ed: Official Journal of the European Union, p. 86
22. Illinois Center for a Smarter Electric Grid. http://publish.illinois.edu/smartergrid/. Accessed 30 Mar 2023
23. Angizeh, F., Ghofrani, A., Jafari, A.: Dataset on hourly load profiles for a set of 24 facilities from industrial, commercial, and residential end-use sectors. Mendeley Data **1**, (2020). https://doi.org/10.17632/rfnp2d3kjp.1
24. Open-Meteo. Free Weather API. https://open-meteo.com/. Accessed 28 Oct 2022
25. Yang, H., Lu, L., Zhou, W.: A novel optimization sizing model for hybrid solar-wind power generation system. Sol. Energy **81**(1), 76–84 (2007). https://doi.org/10.1016/j.solener.2006.06.010
26. Bouchekara, H.R.E.H.: Optimal power flow using black-hole-based optimization approach. Appl. Soft Comput. **24**, 879–888 (2014). https://doi.org/10.1016/j.asoc.2014.08.056
27. Torres, G.L., Quintana, V.H.: An interior-point method for nonlinear optimal power flow using voltage rectangular coordinates. IEEE Trans. Power Syst. **13**(4), 1211–1218 (1998)
28. Abido, M.A.: Environmental/economic power dispatch using multi-objective evolutionary algorithms. IEEE Trans. Power Syst. **18**(4), 1529–1537 (2003). https://doi.org/10.1109/TPWRS.2003.818693
29. de Sousa, V.A., Baptista, E.C., da Costa, G.R.M.: Optimal reactive power flow via the modified barrier Lagrangian function approach. Electr. Power Syst. Res. **84**(1), 159–164 (2012). https://doi.org/10.1016/j.epsr.2011.11.001
30. Renewable Energy Production in Portugal on 2023. APREN. (n.d.). https://www.apren.pt/en/renewable-energies/production. Accessed 3 May 2023
31. Na, S., Anitescu, M., Kolar, M.: Inequality constrained stochastic nonlinear optimization via active-set sequential quadratic programming. Math. Prog. (2023). https://doi.org/10.1007/s10107-023-01935-7
32. Hajela, P.: Genetic search - an approach to the nonconvex optimization problem. AIAA J. **28**(7), 1205–1210 (1990). https://doi.org/10.2514/3.25195

33. Alan, H.: Genetic algorithm and programming. In: An Introduction to Computational Physics, pp. 323–346 (2006). https://doi.org/10.1017/cbo9780511800870.013
34. Amoura, Y., Pereira, A.I., Lima, J.: Optimization methods for energy management in a microgrid system considering wind uncertainty data. In: Kumar, S., Purohit, S.D., Hiranwal, S., Prasad, M. (eds.) Proceedings of International Conference on Communication and Computational Technologies. AIS, pp. 117–141. Springer, Singapore (2021). https://doi.org/10.1007/978-981-16-3246-4_10
35. Amoura, Y., Ferreira, Â.P., Lima, J., Pereira, A.I.: Optimal sizing of a hybrid energy system based on renewable energy using evolutionary optimization algorithms. In: Pereira, A.I., et al. (eds.) OL2A 2021. CCIS, vol. 1488, pp. 153–168. Springer, Cham (2021). https://doi.org/10.1007/978-3-030-91885-9_12