

# Implementation and Proof Experiment of Communication Network for Disaster Prevention Using LPWA

Kazuaki Tanaka[1(✉)], Hiroyuki Maeda[1], Keisuke Yamashita[2], Yan Liu[3], and Hemanta Hazarika[3]

[1] Kyushu Institute of Technology, Kitakyushu, Japan
kazuaki@ics.kyutech.ac.jp
[2] CMN Co., Ltd., Tokyo, Japan
[3] Kyushu University, Fukuoka, Japan

**Abstract.** One of the negative influence of climate change is the occurrence of large-scale disasters. All over the world, climate change-related disasters such as torrential rains, heavy snowfalls, floods, and landslides are occurring. For example, the number of torrential rains has increased 1.4 times in the last ten years and is increasing dramatically.

In the case of a large-scale disaster, communication and power supply are not available; Typhoon No. 15 in 2019 caused a 20-day power outage in Chiba prefecture, Japan. The power outage also causes the carrier communication network inoperable, leading to a secondary disaster that prevented smooth evacuation instructions.

A system that can stably collect weather data and provide evacuation instructions at public facilities in the case of a disaster would greatly contribute to disaster prevention. The authors developed a general-purpose communication module for LPWA-based communication and designed a protocol to build an autonomous mesh communication network. This paper describes the implementation of this developed system for a ground monitoring system using soil sensors and reports on the proof experiment.

**Keywords:** LPWA network · Disaster prevention · Ground monitoring system

## 1 Introduction

Around the world, climate change-related disasters such as torrential rains, heavy snowfalls, floods, and landslides are occurring. In Japan, a power outage that lasted for hours of storage resulted in a secondary disaster in which communications systems dependent on carrier communications networks were lost and smooth evacuation instructions could not be given.

Since communication and power supply cannot be secured in the event of a large-scale disaster, a communication system that does not depend on power supply and carrier communications is desired.

© The Author(s), under exclusive license to Springer Nature Switzerland AG 2022
O. Gervasi et al. (Eds.): ICCSA 2022 Workshops, LNCS 13379, pp. 47–56, 2022.
https://doi.org/10.1007/978-3-031-10545-6_4

A system that can stably collect weather data and also provide evacuation instructions at public facilities during a disaster will contribute to disaster prevention. The authors have developed a general-purpose communication module for LPWA-based communication and designed a protocol to build an autonomous mesh communication network. The authors implemented an LPWA communication protocol and an application that collects data from a weather meter using this protocol. This paper describes the implementation of a monitoring system using the developed system and the results of a demonstration experiment.

## 2 Sensing for Disaster Prevention

### 2.1 Requirements

This paper shows the design and implementation of a communication system for disaster prevention and disaster reduction. The proposed system will contribute to the prevention of many recent disasters.

This system includes the following elements; remote sensing with reliability, and a notification function to provide evacuation instructions at public facilities. These features are useful for disaster prevention and disaster reduction.

This communication system covers a wide area and does not depend on the networks of telecommunication providers. Furthermore, this communication mechanism has security features to prevent unauthorized communication by unauthorized parties. In addition, to make the resilient communication infrastructure to disasters, it will have redundancy and have a mechanism for reconstructing communication routes.

This communication module has an interface to attach the required sensors to detect the occurrence of disasters. Ensure those sensors, which will vary depending on the geographical situation, can be changed flexibly.

### 2.2 LPWA Communication

Low-power Wide-area communications, commonly referred to as LPWA, is a promising communication for IoT devices in recent years, and a variety of standards have been proposed [1]. LPWA has several standards, shown in Table 1.

For this study, the LoRa standard, one of the LPWA communication methods, was adopted to configure a flexible network and to use a proprietary protocol.

The LoRa method includes the LoRa (which stands for Long Range) modulation standard and the LoRaWAN standard. LoRa has a spread spectrum modulation scheme as a specification, and also the communication physical layer is specified. LoRa uses a license-free radio band that can be used for long-distance transmission with low power consumption. LoRaWAN, on the other hand, specifies a software communication protocol and system architecture. As the name implies, it uses LoRa modulation and specifies a bi-directional communication upper layer. LoRaWAN uses cloud-based MAC (Media Access Control) and a communication gateway managed by the Laura Alliance.

**Table 1.** LPWA standards

| | |
|---|---|
| LoRa | Promoted by the LoRa Alliance and freely available for private use<br>Only the modulation method is specified |
| LoRaWAN | Communication network based on the LoRa system,<br>which requires the use of LoRa Alliance-certified equipment |
| NB-IoT | Using the the mobile carrier band<br>Available only in the carrier's service area |
| Sigfox | Services provided by SIGFOX, Inc<br>Commercial service and worldwide available<br>through international roaming |
| LTE-M | LTE for machine-type-communication<br>Same area as LTE service. Relatively high speed communication |

In this study, we chose LoRa because this is the most cost-effective way to achieve a proprietary communications infrastructure suitable for disaster prevention and disaster reduction. The communication system will design and implement a protocol and communication control system using the LoRa modulation scheme to provide effective communication during disasters.

### 2.3 Security Features

Communications that use radio waves must have security measures since anyone can receive radio waves. The proposed system must not only ensure security but must also be power efficient because it must operate resiliently against disasters.

Security enhancements require computational power for their enhancement. If a system has strong cryptography capabilities, it requires a lot of computing power and consumes power. Assume that the communications required during a disaster are issuing alerts for evacuation, sending out urgent SOS, and so on. These disaster messages need not be secret. On the other hand, unauthorized messages by malicious parties should be rejected. In other words, the ability to detect unauthorized communications is an essential requirement.

Based on the above requirements, the system has a mechanism to verify that the received message was sent by the sender. This function can be regarded as a type of electronic signature. Design a lightweight verification mechanism that satisfies the requirement of power-saving.

### 2.4 Sensors for Disaster Prevention

While there are different types of disasters, this study will focus on heavy rainfall and the landslides caused by rain. Sensors to measure rainfall (called accumulative rain meters) and soil pressure sensors for landslides detection will be installed in the experimental field. The data acquired by those sensors will be transmitted

to a central station (which will be called the head quarter; HQ) using LPWA communication.

If the values received by the HQ from the rainfall and soil pressure sensors exceed the threshold values, the HQ sends out an alert message via LPWA communication. All indicators which the LPWA communication module is connected receive alert message. Finally residents receive the alert messages.

## 3 Implementation

### 3.1 LPWA Communication Module

We have implemented communication middleware for secure LPWA communication, which uses the LoRa modulation scheme so that it can be used in disaster situations. The communication middleware has the following functions;

- Variable length messages are sent using LoRa modulation.
- The received message is verified with a pre-shared key. If the verification fails, this module discards the invalid message.

In addition, to make it simple to prototype the system and to facilitate demonstration experiments, this LPWA module also provides the following functions;

- Connect to a PC via USB cable and treat LPWA communication transparently as serial communication
- Shared keys can be updated by serial communication commands (known as AT commands)

In the LoRa system, there are legal restrictions on how often radio waves can be transmitted. After one message is transmitted, the next message is transmitted after a certain amount of time has elapsed. In the case of Japan, the legal requirement is to wait 10 times the length of time it took to transmit (Fig. 1) .

Therefore, the measurement of the time length taken to send a message and the subsequent suppression of transmission is an essential function of the LPWA module. The time length required to transmit can be calculated using the LPWA modulation rate. This time length can determine the time for next transmitting.

The LPWA module developed in this study has three FIFOs: LPWA transmit, LPWA receive, and USB serial receive. The LPWA module provides enqueue and dequeue APIs of these FIFOs, so that user applications can only make permitted FIFO accesses. The LPWA module's timer interrupt mechanism takes control of the FIFOs and sends messages using the LPWA at the appropriate time (Table 2).

Figure 2 shows the relationship between the LPWA module middleware and the user application. The FIFOs are strictly managed by the LPWA module middleware, which performs processing on each FIFO at the appropriate time through interrupts and scheduling. This middleware allows user applications to

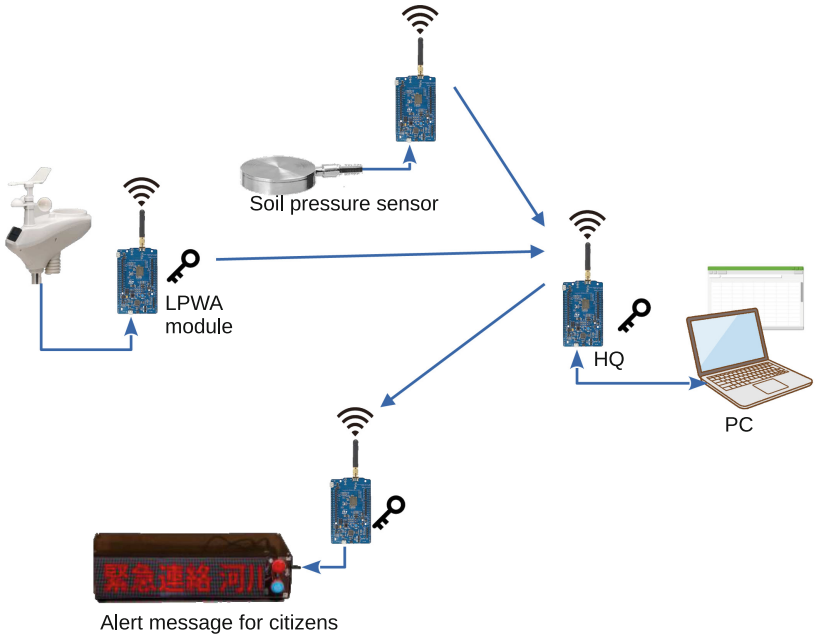


**Fig. 1.** LPWA communication system for disaster prevention

send and receive messages without concern about the timing (or legal restrictions) of LPWA communications.

As for the FIFO for output from the LPWA module to the PC via USB (USB TX), the PC side has a sufficient buffer that is controlled by hardware. Therefore, the LPWA module does not have a FIFO (USB TX).

With this feature, the user application developer need only implement a program such as the one shown in Listing 1.1 for the simplest bidirectional chatting.

### 3.2 Reconstructing Routes

LPWA modules can communicate over long distances. In previous experiments, they have successfully communicated over 10 km in open areas. However, if there are obstacles between the modules, they cannot communicate each other; the sub-giga-band radio waves used in LPWA are difficult to diffract. Therefore, relaying repeater for LPWA communications is necessary.

The communication realized in this research can be regarded as a tree structure with HQ as the root. Each node of the tree is an LPWA module, and the leaves of the tree are sensors and indicators. Just as a tree structure in programming has a pointer to the parent node of the tree, the LPWA module also keeps the parent node link information of the node on the HQ side.

**Table 2.** FIFO access APIs

| FIFO | Enqueue | Dequeue |
|---|---|---|
| LPWA TX | User request | Middle-wear |
| | Send message | On scheduled timing |
| LPWA RX | Middleware | User request |
| | By hardware interruption | Receive message |
| USB serial RX | Middleware | User request |
| | Using hardware flow-control | Console output |

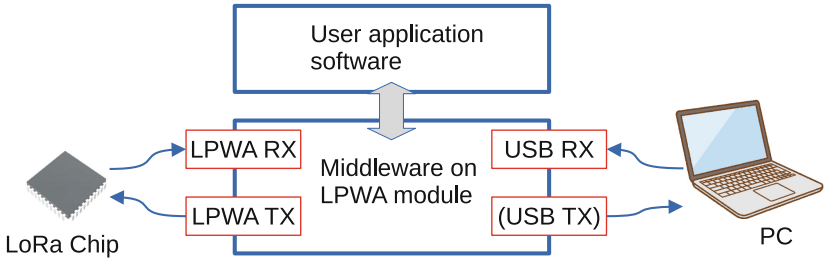


**Fig. 2.** FIFOs in LPWA module

A mechanism that allows flexible updating of the parent-child relationship of the nodes will result in a resilient network. Physical loss of the LPWA module due to a landslide would cause a disconnection of the communication network. This disconnection should be avoided for a disaster communication network.

Communication in the LPWA consists of (1) the transmission of a message (alert) from the HQ to the indicator and (2) the transmission of a message (sensor value) from the sensor to the HQ. This message is denoted as $Message$.

To distinguish the message in (1) from messages sent in the past, a sequence number $Seq$ is added when HQ creates the message. $Seq$ is a natural number that is incremented. In addition, messages in (1) and (2) have $SenderID$ as the ID of the module that sent the message. The module that created the message is the $SenderID$.

Thus, the message in (1) is

$$\{Message, Seq, SenderID\} \tag{1}$$

and the message in (2) is

$$\{Message, SenderID\} \tag{2}$$

Every module keeps $MyID$ as its ID, the parent node on the HQ side as $UplinkID$, and the $PreviousSeq$ is $Seq$ of the last received message. The module in HQ has $UplinkID = MyID$.

**Listing 1.1.** example: Chat Application Program

```
void lpwa_chat_demo(void) {
        uint8_t buf[MAX_MESSAGE_SIZE+1];

    // PC(serial input) -> LPWA TX
        if (QueueSize(&fifo_serial) > 0) {
                uint8_t size = DeQueue(&fifo_serial, buf);
                EnQueue(&fifo_tx, buf, size);
        }

    // LPWA RX -> PC(console output)
        if( QueueSize(&fifo_rx) > 0 ){
                uint8_t size = DeQueue(&fifo_rx, buf);
                buf[size] = 0;
                printf("%s ", buf);  // without FIFO
        }
}
```

Now consider the message transmission in (1). When HQ sends a message $\{Message, Seq, SenderID\}$, all modules that receive this radio wave receive the message.

The receiver compares the $Seq$ in the message with its $PreviousSeq$, and only if $Seq > PreviousSeq$, it knows that a new message has been received. At this time, the $SenderID$ is assigned to the $UplinkID$ and the parent node's information is updated. Next, change the $SenderID$ to $MyID$ and send the message again. This resending of the message is the relay function.

Next, consider the message transmission in (2). The module that wants to send a sensor value sends the message $\{Message, UplinkID, MyID\}$. The module receiving this message compares the $UplinkID$ in the message with its ID ($MyID$). If $UplinkID = MyID$, the module determines that it relays this message and sends the message $\{Message, UplinkID, MyID\}$ again. Note that HQ knows that the message has reached HQ because of $UplinkID = MyID$.

## 4 Experimentation and Results

We designed, developed, and implemented a communication control program for the LPWA communication module. Experiments were done in an experimental field in Soeda-Cho, Fukuoka, Japan. In Soeda-Cho, a landslide caused by heavy rainfall occurred in 2021, and the railroad track was damaged by soil and sand. The experimental field is located near the site where this landslide occurred (Fig. 4).

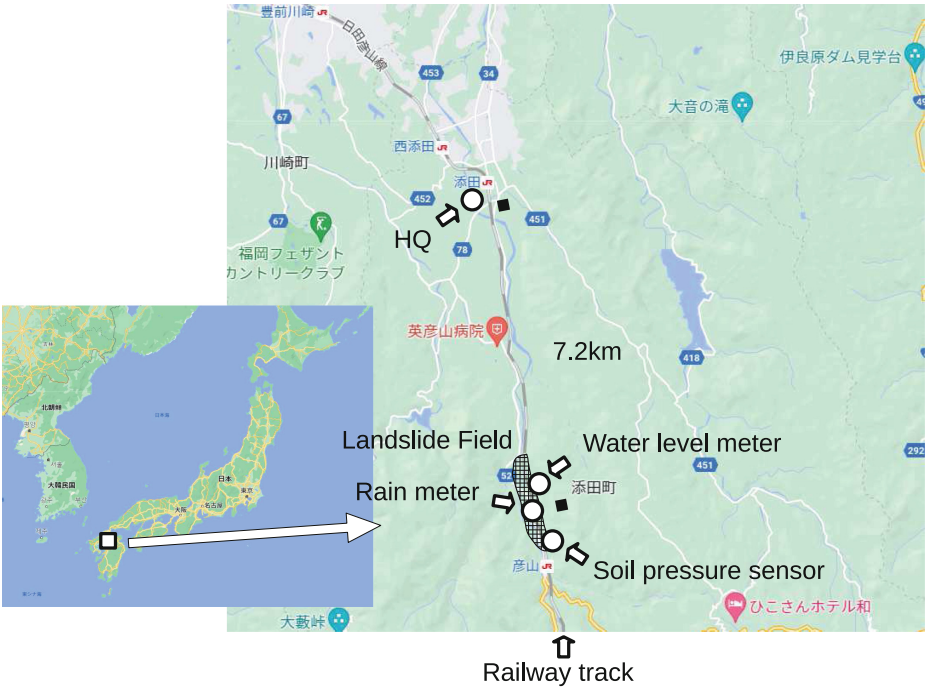


**Fig. 3.** Field map of experimental field



**Fig. 4.** Landslide field in Soeda-Cho, Japan

We deployed three sensors with an LPWA communication module; a rain meter, soil pressure sensor, and water level meter in the experimental field, where the landslide has occurred. And one HQ LPWA module in the town hall building. The distance between the experimental filed and the town hall is about 7.2 km (Fig. 3).

### 4.1 LPWA Modules

I developed an LPWA module using the B-L072Z-LRWAN1 from STMicroelectronics. We implemented the firmware on this microcontroller board and used it in our experiments.

The microcontroller board, solar panels, and batteries were combined and installed in the experimental field (Fig. 5).

An experiment was conducted in which one message was sent intermittently from the sensor to the HQ every 4 min, and The module was operated on battery power for 200 h. In actual operation, the module has a mechanism to continuously recharge the battery by generating electricity with the solar panel, so it can survive disasters.

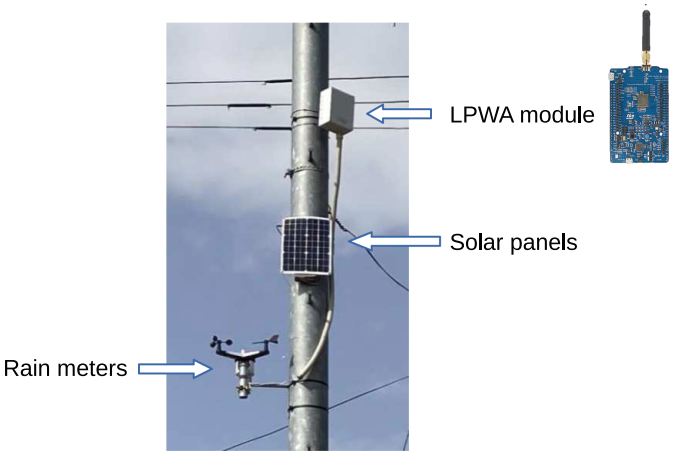


**Fig. 5.** Installed LPWA module

### 4.2 Sensor Values

The system will visualize data from weather sensors placed along with the LPWA module.

The weather sensors send messages every 4 min with data on rainfall, temperature, humidity, wind speed, and wind direction. Three weather sensors were placed in the experimental field. HQ receives the messages from these three weather sensors and stores them in a time series database.

We have implemented an application to access and visualize the time series database. The system correctly collected the sensor data (Fig. 6).




**Fig. 6.** Visualization of sensor values

## 5 Conclusion

This study showed a system consisting of a middleware that provides a platform for communication of the LPWA module, a weather meter application on the middleware, and a data collection and visualization program.

The weather meter and LPWA module were placed in an outdoor experimental field. The experiment ran for six months and had an up-time of 96%. The downtime of the experiment (4% of the experiment period) was for maintenance, and there was no communication breakdown except for the maintenance time. The results of this experiment showed that stable data acquisition was possible.

In the future, sensing with an additional soil pressure sensor and soil moisture meter will be added to the experiment to predict landslides [3].

## References

1. Saari, M., Bin Baharudin, A.M., Sillberg, P., Hyrynsalmi, S., Yan, W.: LoRa - a survey of recent research trends. In: 2018 41st International Convention on Information and Communication Technology, Electronics and Microelectronics (MIPRO), pp. 0872–0877 (2018). https://doi.org/10.23919/MIPRO.2018.8400161
2. Noreen, U., Bounceur, A., Clavier, L.: A study of LoRa low power and wide area network technology. In: International Conference on Advanced Technologies for Signal and Image Processing (ATSIP) 2017, pp. 1–6 (2017). https://doi.org/10.1109/ATSIP.2017.8075570
3. Liu, Y., Hazarika, H., Takiguchi, O., Kanaya, H.: Developing a sustainable system for early warning against landslides during rainfall. In: Hazarika, H., Madabhushi, G.S.P., Yasuhara, K., Bergado, D.T. (eds.) Advances in Sustainable Construction and Resource Management. LNCE, vol. 144, pp. 917–926. Springer, Singapore (2021). https://doi.org/10.1007/978-981-16-0077-7_75