

Using Edge-to-Cloud Analytics IoT Dumpsite Monitor for Proactive Waste Management

E. S. Mbonu, K. C. Okafor, G. A. Chukwudebe(✉), C. O. Ikerionwu, and E. C. Amadi

Federal University of Technology Owerri, Owerri, Nigeria
{ekene.mbonu,kennedy.okafor,gloria.chukwudebe,
charles.ikerionwu}@futo.edu.ng

Abstract. In this work, an Edge-to-Cloud Analytics architecture model for Waste Management and Hazard Alert system is developed for prompt management of waste dumpsites. The system enables IoT smart nodes to monitor dumpsites and generate alerts on the detection of gas emissions, smoke, and fire. The custom-designed IoT dumpsite edge aggregator module is achieved using MQ-7 (carbon monoxide), MQ-2 (smoke/methane), MQ-135 (CO_2, benzene, NH_3, NOx), and flame sensors for proactive detection of environmental hazards. The scalable Edge-to-Cloud Analytics architectural model produces efficient data stream uploading from the IoT sensor nodes into the cloud domain with an MKR-1000 Edge Controller used to achieve edge-to-fog gateway processing. Three algorithms developed for the system include IoT node characterization, sensor reading/calibration, and data transmission to remote servers using Simultaneous Wireless Information Power Transfer (SWIPT). A proof of concept was demonstrated by building three IoT dumpsite nodes that were used for testing. The Testbed deployment with visualization patterns is observed on Open Source ThingSpeak Cloud-native platform. The key contributions to knowledge include the use of Edge-to-Cloud analytics for dumpsite monitoring and prompt evacuation, the introduction of SWIPT to conserve energy for optimized valued-insights and the development of an architectural model that allows lower computer-storage resources at the edge. This is very good since a single IoT device only serves a small geographic area. Future work will investigate throughput and latency minimization, API containerization for light deployments using Docker Swarm and Kubernetes. Since most dumpsites are remarkably close to end-users, edge to cloud (IoT) analytics is recommended for a sustainable solution to waste management in Nigeria.

Keywords: Software engineering · Cloud computing · IoT applications · Edge-to-cloud analytics · Dumpsite monitoring · Waste management systems

1 Introduction

Environmental sustainability has greatly suffered enormous setbacks because of the potential risks emanating from unsustainable waste disposal systems in Nigeria. Most towns and cities have several open dumpsites existing close to residential areas as well as business domains. Some of the wastes are dumped where they block access roads and drainage systems which empty into rivers that communities use for domestic purposes

© Springer Nature Switzerland AG 2021
O. Gervasi et al. (Eds.): ICCSA 2021, LNCS 12957, pp. 465–480, 2021.
https://doi.org/10.1007/978-3-030-87013-3_35

(Fig. 1a). Sometimes, waste collectors set fire at dumpsites, such fires release hazardous gases to neighboring communities and at times the fire can spread to destroy farms and individual properties.

Sadly, the Nigerian population continues to increase at 2.6% annually without any robust waste evacuation and management system in place [1]. The amount of waste generated in a city grows in similar proportion to the economic engagements and population growth rate. The glaring consequence of unattended waste disposal and management systems is that it leads to environmental hazards to the human populace [2]. To date, the regulations governing solid waste management in Nigeria are not adequately enforced by appropriate authorities [3]. Hence, many Nigerians do not appreciate the idea of efficient waste management since many people get away with the indiscriminate dumping of refuse. In Nigerian cities today, the aggregate waste generation rate is estimated at 0.65–0.95 kg/capita/day [3].



(a)



(b)

Fig. 1. a. Wste dumpsite in Umuosu Community, Naze, Owerri, Imo State. b. Waste Site Nekede Community, Owerri, Imo State, *Source*: (Author's field Photo, March 2020)

Although recently, the informal sector has started waste collection and recycling in most cities in Nigeria (Fig. 1b), the effort is grossly inadequate because about 42 million tons of wastes are generated annually in the country, monitoring, and channeling these wastes presently constitute huge economic concerns [4].

Today, some of the lingering issues associated with waste management systems in the country include limited waste collection systems, unsustainable collection services, and weak disposal procedures. The health and environmental consequences are randomly huge, cutting across several African countries. Despite the various organizations involved in the waste management value chain in Nigeria, very little success rate has been recorded, the predominate indiscriminate disposal of wastes is still a serious environmental and public health challenge.

Software engineering, IoT and cloud computing technologies can be introduced to resolve this challenge as is done in advanced countries. This work is part of a Waste Management and Hazard Alert System (WM-HAS) research project for use of ICT and innovative business model to create a synergy amongst stakeholders in the waste management supply chain, waste generators, evacuators, and recycling companies. The project involved the setting up of a waste management Network Operating Center (NOC) that will house network equipment and database repositories. The focus of this aspect of WM-HAS research is on the integration of smart IoT sensor nodes at selected dumpsites (both legal and illegal) where hazardous materials are likely to be generated. Software design processes with best practices from software engineering will be utilizing for implementation of the IoT and Edge-cloud architecture. The major activities include field study to gather requirements, programming, software testing, integration, and deployment. The Software development process employed is the Agile approach. This relies on various software configuration management to govern changes in both the IoT, and Cloud algorithm designs as well as their integrity, traceability, and code design.

The primary objective of this research is to introduce state-of-the art proactive technology to avert hazards from dumpsites using IoT Smart Sensors and cloud-based predictive visualizations. Given the challenges of utilizing real-time data from several smart IoT nodes, Edge to Cloud Analytics (ECA), and a computing model that involves real-time data analysis in which data streams (incoming) are processed and analyzed at both non-central locations as well as the Cloud space will be considered. This is inspired by some previous work involving Cloud-connected devices [5–7]. Additionally, because of electricity power inadequacies at dumpsites, this work will explore Simultaneous Wireless Information and Power Transfer (SWIPT) [8]. A prototype IoT system with ECA technology and Simultaneous Wireless Information and Power Transfer will be developed for real-time monitoring of dumpsites for mitigation of hazardous gases or fire.

The remainder of this paper is organized as follows: a review of closely related works is presented in Sect. 2. The edge-cloud computing architecture and implementation of the prototype IoT Dumpsite monitor system are described in Sect. 3. Section 4 presents the system simulation and evaluation. Section 5 presents the results and discussion. Section 6 concludes the paper with future directions and recommendations.

2 Review of Related Literature

The Internet of Things (IoT) refers to a system of internet-connected objects that can collect and transfer data over a wireless network without human intervention. IoT ecosystems are driven by data collected from devices that sense and interface with the physical

world. Presently, IoT is inspiring the latest Industrial 4.0 applications and increasing productivity in agriculture, transportation, manufacturing, electric grids, and many more. With successes from some of these sectors, researchers are beginning to explore IoT applications for improved waste management. So far, the most common IoT application in waste management operations currently is the automated route optimization of garbage pickup trucks. These trucks generally follow a specific route every day to collect trash, the drivers generally do not know how full a trash bin is before they get to it, this results in a lot of wasted time and fuel. With a user interface revealing the locations and fill levels of all bins, waste collector trucks can get an automated route planned for them that has prioritized areas in urgent need of cleanup and avoid bins that are yet to get filled up [9].

The authors in [10–12] discussed IoT designs for smart-city projects using integrated ICT as well as highlighting existing IoT platforms for achieving smart city applications. The authors in [13] focused on a sustainable strategy for municipal solid waste management in Nigeria, especially for power generation. In [14], the researchers developed an agent-based waste management system and simulated the system behavior under various conditions. The work in [15] identified the major problems in waste management such as lack of waste segregation at source, low rate of house-to-house collections, use of open vans, and proposed an online management information system to optimize daily operating resource allotment to make the system effective and sustainable. The work in [16] focused on decision support systems using Geographic Information System for waste disposal. Other technology-enabled approaches to waste management were studied in [5, 17–20], and [21]. Some other literature surveys carried out were on the power challenges of IoT systems. The Simultaneous Wireless Information Power Transfer (SWIPT) in the energy-constrained environment for wireless devices was found promising for IoT nodes.

The major research gaps identified in the literature include:

i. Non-existent tech solutions for dumpsite monitoring to mitigate potential hazards.
ii. Non-existent solutions for power challenges of IoT deployments in remote environments without electricity grid.
iii. Non-deployment of Edge analytics in process automation of waste management systems.

Because of these gaps, this research work explored the utilization of edge-to-cloud analytics and SWIPT for the development of IoT nodes for monitoring dumpsites to improve waste management systems. This is novel and will improve waste management in developing countries.

3 Methodology

The conceptual diagram for the Waste Management and Hazard Alert System (WM-HAS) is shown in Fig. 2. The Web and Mobile modules have been developed by a different team (wm-has.org.ng), while the work of IoT team is presented in this paper.

The IoT team visited various dumpsites, informal recyclers, and waste collectors in Imo and Anambra state in Nigeria. The team took into consideration the findings from

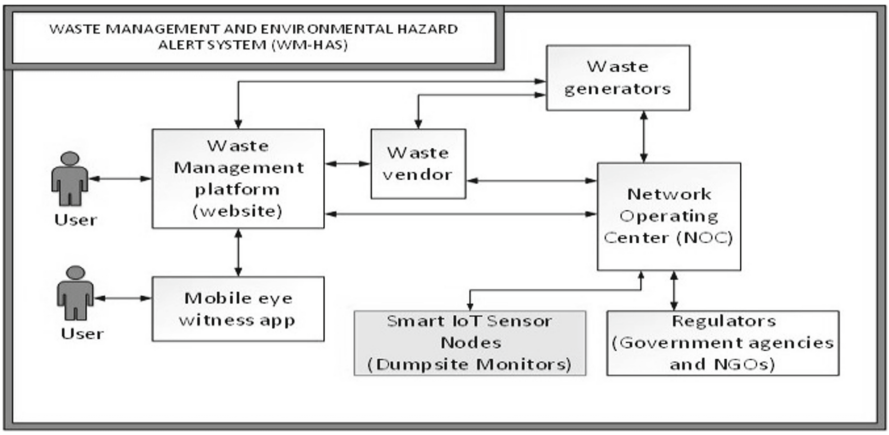

Fig. 2. The conceptual diagram for WM-HAS.

field surveys and literature reviews to develop an IoT Smart Node system for monitoring dumpsites. The block diagram model for a node of the IoT Dumpsite Monitor is shown in Fig. 3. The system is designed to be scalable so that it can have any number of IoT nodes for dumpsite monitoring. Each node system contains sensors for detecting smoke, flame, and gases (carbon dioxide, carbon monoxide, and nitrogen).

The system involves physical sensing of these parameters from dumpsites and transmission in real-time for online analytics. The detected parameters are used for decision-making for both frontend/backend activities. The other contents of the Node include the IoT controller, power supply, and IoT wireless gateway (Fig. 3). Each independent system located at a dumpsite transmits detected parameters to the central Server. The IoT controller manages the sensing and energy algorithms and implements the communication algorithm responsible for the transmission of the collected data streams into the Cloud server that runs the analytics.

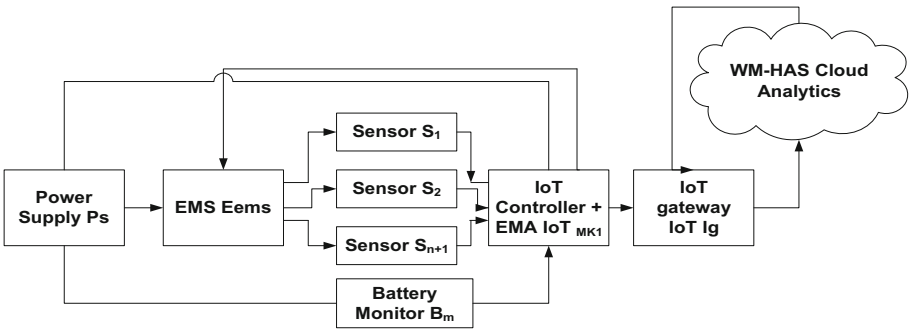

Fig. 3. IoT dumpsite monitor node.

The Energy Management System (EMS) in Fig. 3 is implemented with a bank of relays that energize the controller to activate (switch on) the sensors only at the sampling time. This then optimizes the power consumption of the whole system. Furthermore, the IoT gateway is active only when the system is ready to transmit data. The concept of full-duplex, dual-hop decode with SWIPT was implemented for the system. The power supply module P_s is DC, comprising the battery and solar panel. This is monitored via the IoT controller which pushes the output into the cloud. Figure 4 shows the state diagram.

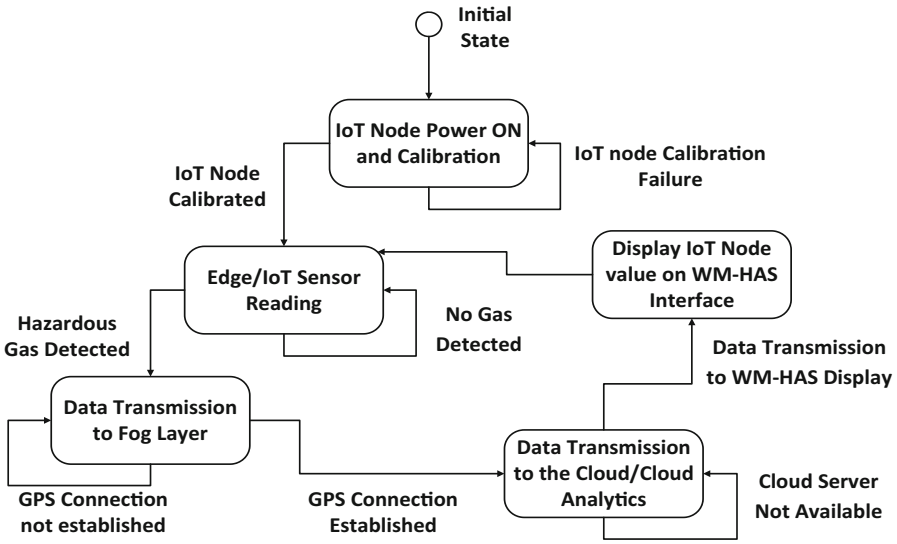

Fig. 4. IoT dumpsite node state diagram.

3.1 System Architecture

A key part of any IoT strategy design is figuring out where to process and analyze the data being generated, which analytics are best to use for maximum benefit, edge or cloud, or hybrid. This decision determines the system architecture to use for any solution. Edge analytics enables data analysis closer to the data source rather than having to send raw data to the cloud for analysis [6]. This reduces the huge costs associated with traditional big data analytics. Some of the other benefits of edge analytics are real-time analysis of data which helps with reliability, maintainability, and scalability because each device analyzes its data since the computational workload is distributed across devices [7].

For this work, a hybrid Edge-to-Cloud Analytics (ECA) architecture used is shown in Fig. 5. The dumpsites are deployed with IoT nodes $i, j, k, \ldots, z_{n+1}$ interacting with the IoT gateway. These are linked to wireless transmission gateway as Fog layer. Data analytics, storage, IoT dumpsite reputation management are handled at the Edge I/O data stream database. Device discovery management, mobility management, sampling mode management, sensing scope management, and energy management are handled

at the cloud network layer (Edge APIs and Orchestrators) while the Edge controllers handle the sensor nodes, data preprocessing, and upward migration into the cloud.

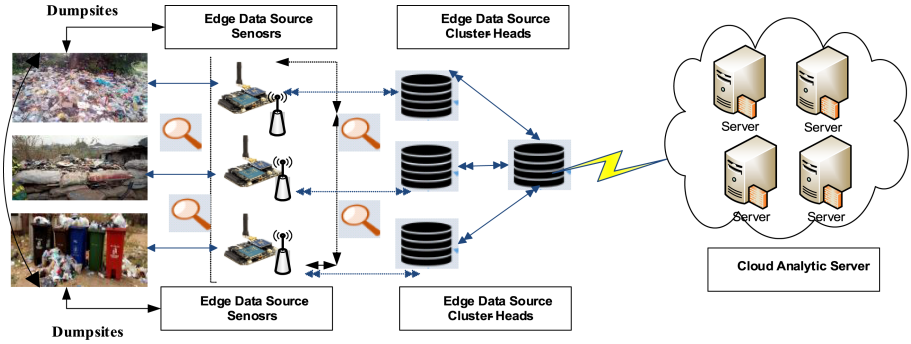

Fig. 5. IoT dumpsite monitor system architecture.

The Edge-to- Cloud analytics architecture used is an enhanced N-Tier architecture comprising:

i. Edge controllers (MKR 1000) for edge to Fog cluster-head (gateway) processing.
ii. Cloud APIs for full-duplex communication (i.e., edge to cloud and cloud to edge). Also, the Orchestrator (Logical) is deployed with the analytics server (pod cluster) for the management of data streams.
iii. Cloud I/O data stream database located in the pod cluster servers.

3.2 System Algorithm Design

In this Section, three software algorithms were derived based on the design requirements in Fig. 5. These are needed to successfully measure dumpsite environmental parameters and transfer the same to the cloud server. These include the IoT node characterization and setup algorithms I, sensor reading and calibration Algorithm II, and data transmission to remote server Algorithm III. From the software Algorithm I, IoT stream data is sent to the Server in Fig. 5 as a concatenated string made up of flame data, smoke data, gas data, and battery level data. In Algorithm II and III, address mapping, instantiations and the control loop decisions are synthesized in the Agile designs.

Algorithm I: IoT Node Characterization and Setup

```
Input:        IoT node physical addresses, PINs, and data type
Output:       mode classification of Testbed physical addresses, PINs
Begin  procedure ( )
Data_type  Flame_route_address = address _number;
Data_type  Smoke_route_address = address _number;
Data_type  Gas_route_address = address _number;
Data_type  GPRS_route_address = address _number;;
Data_type  battery_route_address = address _number
Data_type   Flame_data_label;
Data_type  Smoke_data_label;
Data_type   gas_data_label;
Data_type   battery_data_label;
While (Crypt_round = 1) do
    void setup  ( )
    { gprsSerial.begin(data_baudrate);
      pinMode(Flame_route_address, state_mode);
      pinMode(Smoke_route_address, state_mode);
      pinMode(Gas_route_address, state_mode);
      pinMode(GPRS_route_address state_mode);
      pinMode(battery_route_address, state_mode);
    }
       Until round = Ran ( );
  End
Return Input
```

Algorithm II: Sensor reading and Calibration

```
Input:        Sensor Physical address
Output:       sensor real data value
Begin  procedure ( )
  For (sensor_address=0; sensor_address<4; sensor_address++)
    {Data_type  sensor_value = analogRead(sensor_address);
     Data_type    sensor_real_value = (sensor_value *maximum ADC voltage)/adc_resolution;
       sensor real data value = map(sensor_value, R1, R2, M1, M2);
While (Crypt_round = 1) do
    void setup  ( )
    M1 is the minimum rated value the sensor can read in part per million(ppm)
    // M2 is the maximum rated value the sensor can read in part per million(ppm)
    // R1 is the actual reading of the sensor in the absence of test signal)
    // R2 is the actual reading of the sensor when subjected to the maximum concentration of the //test signal)
    }
       Until round = Ran ( );
  Endif
Return Input
```

Algorithm III: Data Transmission to Remote Server

Input: AT command of GPRS modem, APN, and API address of the remote server ( )

Output: concatenated data comprising flame, smoke, gas, and battery levels ()

```
Begin procedure ( )
gprsSerial.println("set of AT_Commands for GPRS configuration");
gprsSerial.println("AT+CSTT=\"APN_address of GPRS modem\"");
gprsSerial.println("AT+CIPSTART=\"TCP\",\" APN_address of remote
server\",\"port_number of the server\"");
String str="GET
https://api.thingspeak.com/update?api_key=API_addres_of_the_server&field1=" +
String(flame_level) +"&field2="+String(smoke_level)
+"&field3="+String(gas_level)
+"&field4="+String(battery_level);
Serial.println(str);
 gprsSerial.println(str);
While (Crypt_round = 1) do
    void setup ( )
        Until round = Ran ( str);
  Endif
Return Input
```

3.3 Mathematical Formulations

In this section, the mathematical representation of the GPRS transmitted datastreams into the hybrid analytics cloud is described.

Consider the string of data, S_d transmitted to the online server O_s from the IoT node. The transmitted data Tx_d is a function of Flame level F_m, Smoke level S_k, Gas level G_s, and Battery level B_t. So mathematically,

$$S_d = F(F_m, S_k, G_{s,} B_{t,}) \tag{1}$$

Let $\oplus$ be the factor that concatenates the four variables. It follows then that

$$S_d = F_m \oplus S_k \oplus G_s \oplus B_t \tag{2}$$

But flame, smoke, gas, and battery levels are measurable quantities.

If F_{mo} is the analog output of the flame sensor (in volts), and the resolution of the analog to digital converter (ADC) interfaced to the IoT controller is V_{res}, then the digital equivalent, F_{md} of the flame sensor output is given by Eq. (3)

$$F_{md} = \frac{F_{mo}}{V_{res}} * V_{cc} \tag{3}$$

Where V_{cc} is the maximum voltage used in powering the ADC, [22].

Similarly

$$S_{kd} = \frac{S_{ko}}{V_{res}} * V_{cc} \tag{4}$$

$$G_{sd} = \frac{G_{so}}{V_{res}} * V_{cc} \tag{5}$$

$$B_{td} = \frac{B_{to}}{V_{res}} * V_{cc} \tag{6}$$

Where S_{kd} *and* S_{Ko} are digital equivalents and analog equivalents of the smoke sensor's output, respectively.

Also G_{sd} *and* G_{so} are digital equivalents and analog equivalents of the gas sensor's output respectively, just as B_{td} *and* B_{to} are digital equivalents and analog equivalents of the battery sensor's output, respectively.

F_{md}, S_{kd}, G_{sd} B_{td} are digital values in binary format.

Let *str* be a function that converts binary data to string equivalent. It follows then that.

$$F_m = str(F_{md}) \tag{7}$$

$$S_k = str(S_{kd}) \tag{8}$$

$$G_s = str(G_{sd}) \tag{9}$$

$$B_t = str(B_{td}) \tag{10}$$

By combining Eqs. 1 to 10, this gives the mathematical representation for IoT GPRS data transmission from IoT node (Figs. 5).

$$S_d = str(F_{md}) \oplus str(S_{kd}) \oplus str(G_{sd}) \oplus str(B_{td}) \tag{11}$$

4 System Simulation and Evaluation

The system was designed and simulated with Proteus in Fig. 6 and Fig. 7. Equation (11) was used to assemble the production setup. The materials utilized for the design include MKR 1000 Core Controller, Lithium-Ion Battery (5300 mA), Gas sensors (MQ-7 and MQ-2), Flame Detectors, transceiver, Lion Battery Charger, 100 W–12 V solar panel, API Analytics (ThingSpeak). C++ Domain-Specific Scripts (DSS) was employed for coordinating node to core deployments as well as the API interactions. The work used IoT datasheet specifications for the composite edge design. The DSS supported instance-based parameter passing to MKR-1000 core. This allowed for fine-grained customization for IoT module decoupling from the cloud. Hence, with any API script, the nodes can be activated for deployment. The PoC layout including edge to cloud orchestration activities were captured in the complete implementation. Although, EC gives lower compute-storage resources at the edge, it hardly affects the system as a single IoT device only serves a small geographic area. These constraints have been previously discussed in [23–31] which presented an improved orchestration platform for edge to cloud analytics in Smart City waste management.

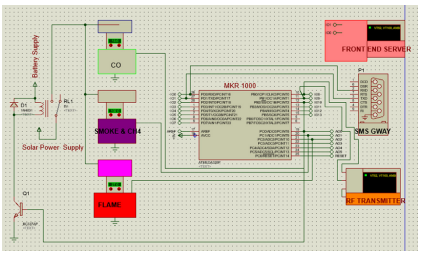

Fig. 6. Dumpsite IoT monitor node.

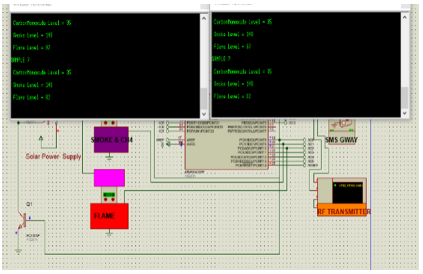

Fig. 7. Dumpsite monitor simulation.

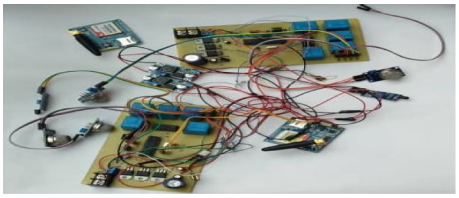

(a)

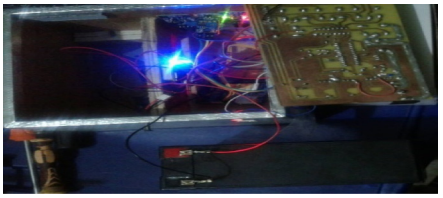

(b)

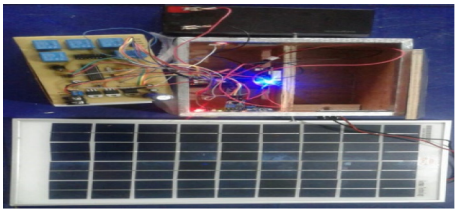

(c)

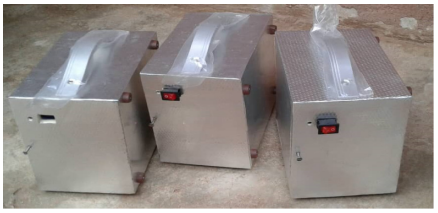

(d)

Fig. 8. a. IoT Edge Dumpsite Monitor circuit. b. Dumpsite Monitor with battery. c. Dumpsite Monitor with Solar panel. d. Dumpsite monitor prototypes.

Figure 8 (a–d) shows the prototype construction for the testbed used for moving data streams from the dumpsite into the cloud.

For the simulation testbed (Fig. 9), the following were utilized namely: OS Platform/NetC, Cloud Power-Edge C6420, Cisco WS-C3650-24TS-L 24 Port Switch, Microsoft Server 2019 for Cloud cores.

5 Results and Discussions

The work done in [27, 28] was employed for analysis of WM-HAS results. Figure 10 shows the generated API key by the server (Thingspeak). This API key is the optimized service used to push data to the server from the IoT sensor nodes. Also, high-level security end-to-end encryption was explored. At the cloud, the various sensed IoT parameters were streamed using the Opensource ThingSpeak IoT analytics platform. The prototype PoC fully supports the WM-HAS API service during the testing.

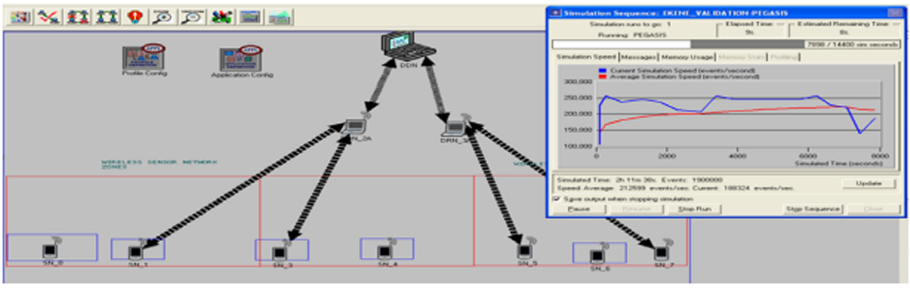

Fig. 9. Simulation compilation.

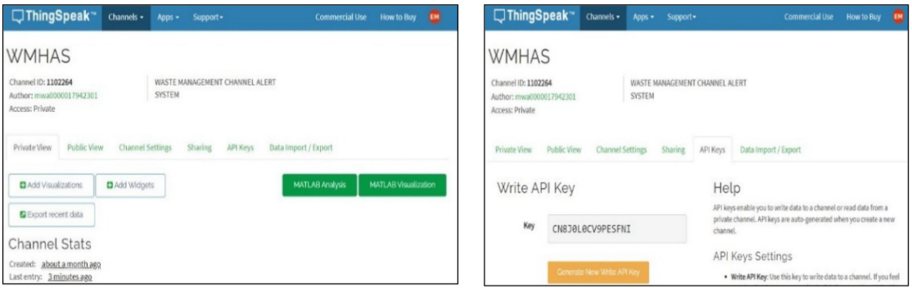

Fig. 10. API key generated by the Server (ThingSpeak server).

The API key (CN8J0L0CV9PESFNI) generated by the server as shown in Fig. 10 is embedded in the communication algorithm resident in MKR 1000 controller chip interfaced with the GPRS gateway. This enables the sensor node to transmit real-time data to the server. The server also generates an automatic timestamp for every data it receives. The screen captures from Thinkspeak for detected parameters are shown in Fig. 11(a–d). Figure 11a shows the received status of the IoT node battery resident at dumpsite A. It was transmitted via the GPRS gateway and received at the ThingSpeak server. From Fig. 11a, it is seen that a total of 18 data values were transmitted at an interval of about 5 min for 90 min. The integrity of the developed IoT sensor node was very good because no data was lost during the time under consideration, and the exact values of the battery voltage (13 V) as measured with a multimeter, was transmitted.

Figures 11b–11d show the sensors' data received from dumpsite A at an interval of 5 min for 90 min. The sensors were subjected to real-time variations of specific physical quantities they are supposed to measure. For example, the gas level sensor was tested by varying the concentration of a cooking gas within the dumpsite; Physical smoke was initiated by burning some waste materials at the dumpsite, while the flame sensor was tested by bringing an ignited gas lighter in the close range of the sensor. It was observed that the gas level sensor gave the highest reading when the nob of the cooking gas was fully opened. The smoke level sensor gave its highest reading when the smoke coming out of waste materials being burnt was thickest. The sensor reading declined as the waste materials went into real flame; the sharp rise observed in Fig. 10d is an exceptional data. The flame sensor showed a sharp rise in its reading when it was brought close to a physical

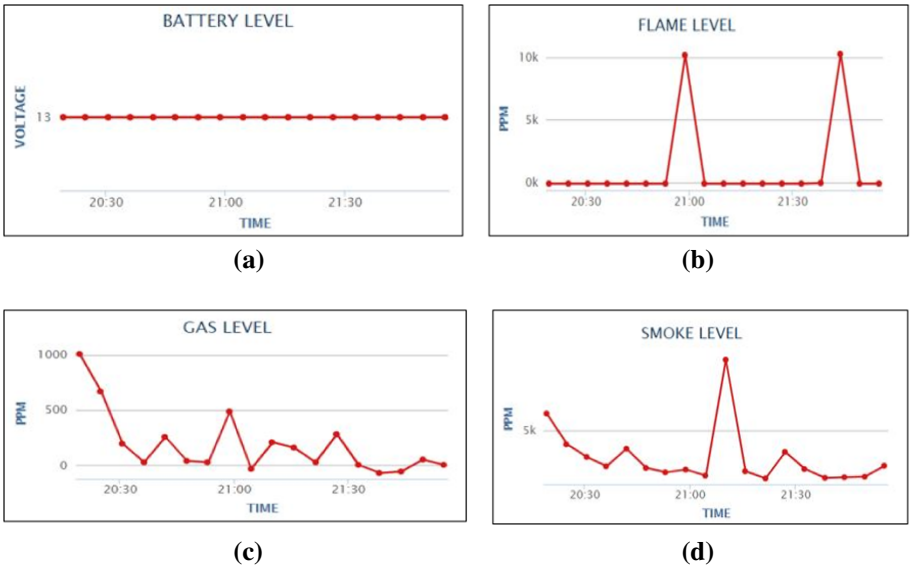

Fig. 11. a. Battery level sample at Dumpsite A. b. Flame sample level at Dumpsite A. c. Gas sample level at Dumpsite A. d. Flame sample level at Dumpsite A.

flame, otherwise, it showed a steady reading as shown in Fig. 11b. The Edge-to-Cloud Analytics used for the design and implementation of the IoT Dumpsite monitor of WM-HAS provided task computational off-loading from IoT enabled dumpsites into Fog and Cloud layers, respectively. This is because most tasks may not be feasible to carry out at the edge layer. The architecture model used, reduced latency when pushing out notifications-alerts to IoT sinks, especially in real-time usage contexts. The test results showed the tasks of sensing and reporting hazardous solutions at dumpsites in real-time. The solution addressed interoperability at Edge-sensor installations covering different locations, data sharing between multiple dumpsites by uses of edge computing systems with unified interfaces, open API standards, and standardized protocols. Furthermore, energy scheduling algorithms for IoT devices minimized energy consumption.

6 Conclusion

An Edge-to-Cloud Analytics architecture model for Waste Management and Hazard Alert system is developed in this paper for prompt management of waste dumpsites. The system utilizes IoT smart nodes to monitor dumpsites and generate alerts on the detection of hazardous gas emissions, smoke, and fire. The scalable Edge-to-Cloud Analytics architectural model produces efficient data stream uploading from the IoT sensor nodes into the cloud domain with an MKR-1000 Edge Controller used to achieve edge-to-fog gateway processing. Clearly, the IoT edge devices offered, lower compute-storage resources at the edge. Efficient data transmission to remote servers used SWIPT technique. The role of the ECA engine and its architecture was validated using a scenario-based simulation. A proof of concept was demonstrated by building three IoT dumpsite

nodes that were used for testing. The Testbed deployment with visualization patterns observed on Open Source ThingSpeak Cloud-native platform confirmed very good performance and results when compared with measured values. The key contributions to knowledge include the use of Edge-to-Cloud analytics for dumpsite monitoring and prompt evacuation, the introduction of SWIPT to conserve energy for optimized valued-insights and the development of an architectural model that allows lower computer-storage resources at the edge. This is very good since a single IoT device only serves a small geographic area. Furthermore, unlike existing systems, the proposed system uses analytics for dumpsite monitoring and evacuation. The proposed system in a production scenario can facilitate and coordinate waste evacuation from both legal and illegal dumpsites. The design considered cost overhead requirements for distributed computer power and communication resources using a lightweight API service. Future work will study API containerization for light deployments using Docker Swarm and Kubernetes. Also, the service throughput and latency profiles of the IoT dumpsite monitors will be investigated to test performance at full deployments. Since most dumpsites are remarkably close to end-users, Edge (IoT) analytics is recommended for a sustainable model to waste management in Nigeria.

Acknowledgment. The authors wish to acknowledge and appreciate the Tertiary Education Trust Fund (TETFUND), Nigeria for funding the Waste Management and Hazard Alert System in 2019 and the Federal University of Technology Owerri management for providing a conducive environment for the research.

Conflicts of Interest. The IoT researchers assert no conflict of interest. The funding sponsors are not involved with any role in the conceptualization, study design, data collection, data analysis, manuscript writing, and results in publication.

References

1. Onu, B., Price, T., Surendran, S.S., Ebie, S.: Solid waste management: a critique of Nigeria's waste management policy. Int. J. Knowl. Cult. Change Manag. (12) (2012)
2. Bose, B.K.: Global warming: energy, environmental pollution, and the impact of power electronics. IEEE Ind. Electron. Mag. **4**(1), 6–17 (2010)
3. Thompson, A.F., Afolayan, A.H., Ibidunmoye, E.O.: Application of geographic information system to solid waste management. In: 2013 Pan African International Conference on Information Science, Computing & Telecommunications (PACT), Lusaka, pp. 206–211 (2013)
4. Ike, C.C., Ezeibe, C.C., Anijiofor, S.C., Daud, N.N.: Solid waste management in Nigeria: problems, prospects, and policies. J. Solid Waste Tech. Manag. **44**(2), 163–172 (2018)
5. Ogundokun, R.O., Awotunde, J.B., Misra, S., Abikoye, O.C., Folarin, O.: Application of machine learning for Ransomware detection in IoT devices. In: Misra, S., Kumar Tyagi, A. (eds.) Artificial Intelligence for Cyber Security: Methods, Issues and Possible Horizons or Opportunities. SCI, vol. 972, pp. 393–420. Springer, Cham (2021). https://doi.org/10.1007/978-3-030-72236-4_16
6. Hernandez, J., Daza, K., Florez, H., Misra, S.: Dynamic interface and access model by dead token for IoT systems. In: Florez, H., Leon, M., Diaz-Nafria, J.M., Belli, S. (eds.) ICAI 2019. CCIS, vol. 1051, pp. 485–498. Springer, Cham (2019). https://doi.org/10.1007/978-3-030-32475-9_35

7. What is Edge Analytics, Sisense (2020). https://www.sisense.com/glossary/edge-analytics/#lbf-680. Accessed 8 Mar 2020
8. Choi, K.W., et al.: Simultaneous wireless information and power transfer (SWIPT) for Internet of Things: novel receiver design and experimental validation. IEEE Internet of Things J. **7**(4), 2996–3012 (2020)
9. Erçin, M., Köse, M., Atasoy, A.: Route optimization for waste collection process through IoT supported waste management system, Technical report, January 2021
10. Özmen, G., Özsoy, A.: Waste management optimization by using IoT. Project Research Report
11. Mehmood, Y., Ahmad, F., Yaqoob, I., Adnane, A., Imran, M., Guizani, S.: Internet-of-Things-based smart cities: recent advances and challenges. IEEE Commun. Mag. **55**(9), 16–24 (2017)
12. Patil, S., Mohite, S.: IoT based smart waste management system for smart city. Int. J. Adv. Res. Comput. Sci. Softw. Eng. **7**(4), 1–4 (2017). ISSN 2277 128X
13. Adeola, A.M., Othman, M.: An overview of ICT waste management: suggestions of best practices from developed countries to developing nations (Nigeria). In: 7th International Conference on Networked Computing, Gyeongsangbuk-do, pp. 109–115 (2011)
14. Udoakah, Y.N., Akpan, U.S.: A sustainable approach to municipal solid waste management in southern Nigeria. In: IEEE Global Humanitarian Technology Conference (GHTC), San Jose, CA, pp. 321–325 (2013)
15. Guihong, B., Hua, W., Qiang, L., Yan, H.: Agent-based model for solid waste management and policy simulating analysis. In: 27th Chinese Control Conference on Kunming, pp. 768–773 (2008). https://doi.org/10.1109/CHICC.2008.4605156
16. Bhattacharya, B.K., Das, S.: A holistic approach for integrated solid waste management system of Kolkata municipality corporation area. In: IEEE 18th International Conference on Industrial Engineering and Engineering Management, Changchun, pp. 1999–2003 (2011)
17. Zeeshan, S., Shahid, Z., Khan, S., Shaikh, F.A.: Solid waste management in Korangi District of Karachi using GPS and GIS: a case study. In: 7th International Conference on Computer and Communication Engineering (ICCCE), Kuala Lumpur, pp. 1–4 (2018)
18. Vasagade, T.S., Tamboli, S.S., Shinde, A.D.: Dynamic solid waste collection and management system based on sensors, elevator and GSM. In: 2017 International Conference on Inventive Communication and Computational Technologies (ICICCT), Coimbatore, pp. 263–267 (2017)
19. Rumyantseva, N.V., Doronin, A.S., Primak, E.A.: Improvement of the system of selective collection of household waste in Latvia. In: 2018 IEEE International Conference on Management of Municipal Waste as an Important Factor of Sustainable Urban Development (WASTE), St. Petersburg, pp. 14–16 (2018)
20. Labib, S.M.: Volunteer GIS (VGIS) based waste management: a conceptual design and use of web 2.0 for smart waste management in Dhaka City. In: Third International Conference on Research in Computational Intelligence and Communication Networks (ICRCICN), Kolkata, pp. 137–141 (2017)
21. Ravi, S., Jawahar, T.: Smart city solid waste management leveraging semantic based collaboration. In: 2017 International Conference on Computational Intelligence in Data Science, Chennai, pp. 1–4 (2017)
22. Le Bin, T.W., Rondeau, J.H., Reed, C.: Analog-to-digital converters. IEEE Signal Process. Mag. **22**(6), 69–77 (2005). https://doi.org/10.1109/MSP.2005.1550190
23. Okafor, K.C.: Dynamic reliability modelling of cyber-physical edge computing network. Int. J. Comput. Appl. (IJCA) **42**, 1–10 (2019). SI-Sustainable Computing for Intelligent Systems
24. Okafor, K.C., Ononiwu, G.C., Goundar, S., Chijindu, V.C., Udeze, C.C.: Towards complex dynamic fog network orchestration using embedded neural switch. Int. J. Comput. Appl. (IJCA) **40**(4), 1–18 (2018). SI-Internet of Everything, Networks, Application, and Computing Systems

25. Okafor, K.C., Achumba, I., Chukwudebe, G., Ononiwu, G.: Leveraging fog computing for scalable IoT datacenter using spine-leaf network topology. J. Electr. Comput. Eng. **2017**, 1–11 (2017). https://doi.org/10.1155/2017/2363240
26. Atayero, A.A., Popoola, S.I., Williams, R., Badejo, J.A., Misra, S.: Smart city waste management system using Internet of Things and cloud computing. In: Abraham, A., Siarry, P., Ma, K., Kaklauskas, A. (eds.) ISDA 2019. AISC, vol. 1181, pp. 601–611. Springer, Cham (2021). https://doi.org/10.1007/978-3-030-49342-4_58
27. Misra, S.: A step by step guide for choosing project topics and writing research papers in ICT related disciplines. In: Misra, S., Muhammad-Bello, B. (eds.) Information and Communication Technology and Applications, ICTA 2020, pp. 727–744. Springer, Cham (2021). https://doi.org/10.1007/978-3-030-69143-1_55
28. Odun-Ayo, I., Geteloma, V., Misra, S., Ahuja, R., Damasevicius, R.: Systematic mapping study of utility-driven platforms for clouds. In: Singh, P.K., Panigrahi, B.K., Suryadevara, N.K., Sharma, S.K., Singh, A.P. (eds.) Proceedings of ICETIT 2019. LNEE, vol. 605, pp. 762–774. Springer, Cham (2020). https://doi.org/10.1007/978-3-030-30577-2_68
29. Samuel, V., Misra, S., Nicholas, O.: Internet of Things (IoTs) and its application to road navigation and usage problem. In: IEEE Asia-Pacific World Congress on Computer Science and Engineering, pp. 1–5 (2014)
30. Abiodun, M.K., et al.: Cloud and big data: a mutual benefit for organization development. In: Journal of Physics: Conference Series, vol. 1767, no. 1, p. 012020. IOP Publishing (2021)
31. Olowu, M., Yinka-Banjo, C., Misra, S., Florez, H.: A secured private-cloud computing system. In: Florez, H., Leon, M., Diaz-Nafria, J.M., Belli, S. (eds.) ICAI 2019. CCIS, vol. 1051, pp. 373–384. Springer, Cham (2019). https://doi.org/10.1007/978-3-030-32475-9_27