Water Distribution Network Perspective in RAFAEL Project, A System for Critical Infrastructure Risk Analysis and Forecast

Antonia Longobardi[1](✉), Grazia Fattoruso[2], Guido Guarnieri[2], Antonio Di Pietro[3], Luigi La Porta[3], Alberto Tofani[3], and Maurizio Pollino[3]

[1] Department of Civil Engineering, University of Salerno, 84084 Fisciano, Italy
antonia.longobardi@unisa.it
[2] ENEA, TERIN-FSD-SAFS Laboratory, Portici Research Centre, 80055 Portici, NA, Italy
{grazia.fattoruso,guido.guarnieri}@enea.it
[3] ENEA, TERIN-SEN-APIC Lab, Casaccia Research Centre, Rome, Italy
{antonio.dipietro,luigi.laporta,maurizio.pollino}@enea.it

Abstract. RAFAEL is the acronym for "system for Risk Analysis and Forecast for critical infrastructure in ApenninEs dorsaL regions" project (PNR 2015–2020 Italian Ministry of University and Research). As part of technological developments undertaken over the last few years, it aims at integrating ad hoc technologies, developed within the project, into a platform, the CIPCast Decision Support System (DSS), which will become the reference platform to support the critical infrastructures (CI) protection and risk analysis, in favour of the Operators and the Public Administration. RAFAEL deals with the management of numerous CI evaluating the damages of natural disastrous on individual elements. the impacts on the services and the consequences on the interdependent CIs. The water supply network issue is approached in the presented research, by means of a heuristic approach. The relevant impacts on the water distribution system have been investigated through the combination of a hydraulic simulation model and a reliability analysis of the hydraulic parameters. The methodology has been applied to the Castel San Giorgio water distribution network.

Keywords: Numerical modelling · Optimal sampling design · Water network · Critical infrastructure protection · CIPCast

1 Introduction

In accordance with art. 2 of Directive 2008/114 / EC of the Council of the European Union, a critical infrastructure is meant as "an element, a system or part of this located in the Member States that is essential for the maintenance of the vital functions of society, health, safety and the economic and social well-being of citizens whose damage or destruction would have a significant impact in a Member State due to the impossibility of maintaining these functions". Critical Infrastructure Systems (CI) particularly include utility networks such as energy, water, telecommunications and transportation

© Springer Nature Switzerland AG 2021
O. Gervasi et al. (Eds.): ICCSA 2021, LNCS 12956, pp. 301–310, 2021.
https://doi.org/10.1007/978-3-030-87010-2_21

systems, i.e. discrete critical facilities such as hospitals, ports and airports among others. For economic, social, political and technological reasons these infrastructures have become increasingly complex and interdependent [1–3]. While this has made it possible to improve the quality of the services provided and contain costs, it has nevertheless induced a high level of vulnerability to a series of natural or non-natural events that can cause damage or destruction [4]. For the protection of critical infrastructures, governmental, individual and academic world actions, are necessary within a security-oriented culture, converging towards the development of new approaches and methodologies to reduce vulnerabilities and face new threats to which these complex systems, increasingly indispensable for our daily life and the security and prosperity of a country, are subject.

A focus of both EU and national legislation is on the energy and transport sectors. In the energy sector, the electricity system (ECI) - Infrastructures and plants for the production and transmission of electricity for the supply of electricity - represents one of the three sub-sectors.

ECIs play a vital role in supporting modern society and are critical for the smooth delivery of critical services such as health, water, wastewater and telecommunications, among others. [5]. In particular as regards the water supply and distribution networks intended for domestic, irrigation and industrial consumption, there are numerous devices that require an electrical power supply for the relative functioning of the water service. This circumstance places a strong dependence of CI water on CI electricity.

In the current literature there are quite a number of studies that illustrate the effect of natural phenomena on ECIs. History teaches that natural disasters related to climate change, such as floods and anomalous heat waves, are critical elements with respect to the functioning of ECIs. A substantial review of the impacts associated with climate change is illustrated in Varianou Mikellidou et al. [6]. The effects that earthquakes have on ECIs are also studied in the literature [7]. What are the effects that critical situations in ECIs can cause in strongly interconnected systems such as those dedicated to the water service are not as well understood [8, 9].

After an introduction of the RAFAEL project (PNR 2015–2020 Italian Ministry of Education, University and Research), which deals with the management of critical infrastructures predicting the relevant impact of natural disastrous events, the current paper presents a methodology to quantitatively assess the interdependence between the electrical and water supply networks at the city scale. An application is presented for the Castel San Giorgio water distribution network, one of the pilot cases study selected by the RAFAEL project. The methodology represents a planning tool for the mitigation of power supply failure events on the water distribution system. It is grounded on a hydraulic simulation model, for which proper calibration a network of sensors must be designed, providing hydraulic pressure at each node and water flow at each pipe of the network as a function of network components relying on power supply. In the end, in a reliability analysis, failures in the power supply network are related to failures in the water supply system.

2 The Context of Application: RAFAEL Project

The study and the related applicative case study presented in this paper have been carried out in the framework of the RAFAEL Project [10]. RAFAEL is the acronym for "system for Risk Analysis and Forecast for critical infrastructure in ApenninEs dorsaL regions" project (co-funded by the Italian Ministry of Research, Grant no. ARS01_00305, scheduled to end in November 2021). Starting from technological developments carried out during over the last few years, the Project aims at integrating ad new technologies and approaches, developed within its activities, into a Decision Support System (DSS), [11] the CIPCast platform (described in the next section). One of the main goals of RAFAEL is related to the risk analysis and the management of numerous Cis, by evaluating the potential harms from natural disastrous events and assessing the likelihood of individual elements being damaged, also considering the impact on the services and the consequences on the interdependent networks and technological system. In particular, CIPCast will become the reference platform to provide services to CI operators and to the Public Administration, by relying on the EISAC.IT programme, which will carry out its operational deployment in Italy.

2.1 The CIPCast Platform

The CIPCast platform is a decision support tool developed for supporting risk analysis and CI protection in the case of natural hazardous events [11]. CIPCast can run both in operational mode (on a 24/7 basis, as an alert system) and in off-line mode as a simulator of events. In the first case, CIPCast gathers data from many different sources (e.g. seismic network surveys, outputs from meteo/hydrological models, etc.), in order to provide a comprehensive overview of the current conditions of the CIs monitored [12]. In case of (predicted/occurred) hazardous event, it produces an expected "damage scenario" for each element of the CI, depending on the type of event expected (and its intensity) and considering the specific vulnerabilities of infrastructure elements (pipes, substations, etc.). In the simulation mode, CIPCast can be used as a stress tester, in order to set-up and run simulations of synthetic natural hazards (e.g. earthquakes) and, consequently, assessing the resulting damages and consequences [13, 14].Such specific application devoted to the earthquake simulation and risk analysis is called CIPCast-ES (Earthquake Simulator). Moreover, CIPCast has been customised to interactively support multi-criteria decision processes [15]. All the CIPCast services and capabilities are accessible by means of its geographical interface (WebGIS application), which can be used as graphical front end of data and information provided and/or produced (Fig. 1).

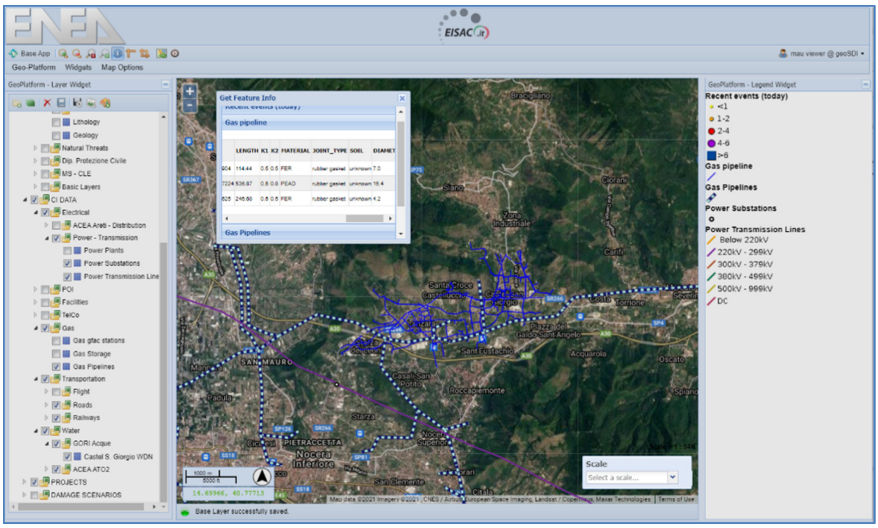

Fig. 1. CIPCast WebGIS interface: example of visualisation of the water distribution network (blue polylines) along with other CIs present in the same area (power and gas networks)

3 Water Supply Network Tools Within RAFAEL

A synthetic description of the case study is preliminarily provided. Following, the methodology aimed at the analysis of the quantitative interdependence between the power and water supply network is detailed.

3.1 The Case Study

The Castel San Giorgio water distribution network (WDN) was selected as the water critical infrastructure to be investigated within the RAFEL project (Fig. 2). The WDN is located in the Campania Region (Southern Italy) and it serves about 14,000 inhabitants, on an area of about 13 km^2. It distributes about 60 l/s every day, provided by three boreholes that guarantee the whole required water resource, through a path line made up of about 60 km of pipelines. More information on the characteristics of the network is detailed in Ottobrino et al. [16].

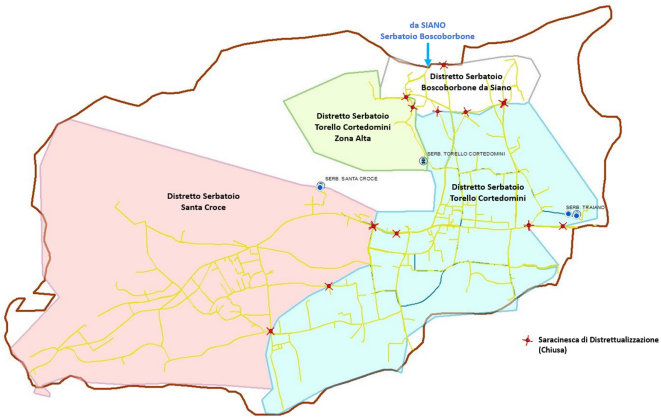

Fig. 2. Castel San Giorgio municipality water distribution network.

3.2 Optimal Sampling Design of the CIs Water

CIs water modeling can be an effective way to analyses the effects on network hydraulics and pinpoint customers who will be negatively affected, by the critical situations in ECIs. In fact, events eventually occur as reservoir shutdowns as well as low storage-tank levels can be predicted and appropriate solutions can be determined.

Modelling capabilities enable operators to manage their water supplies and distribution systems more efficiently and also to take rapid, informed actions to minimize the impact on the customer service during critical situations. These models allow the operators to control network during critical failures, optimize emergency response and consequence management plans.

However, before using these models, it has to be ensured that they predict the behavior of the real network with reasonable accuracy [17, 18]. Several factors can affect the prediction accuracy such as model structure, state and parameters. The input parameters (e.g. pipe roughness) of the model are among these ones, though an effective calibration process can significantly reduce the uncertainty of model predictions.

A calibration process needs a collection of data measured in various points of the real system and over time. The model calibration accuracy is directly dependent on the sampling scheme ie. the quantity and the spatial distribution of measurements/devices to be optimally located along the water distribution network.

For this scope, a sampling design (SD) procedure that determine optimal sensor location schemes has been developed as one of the RAFAEL Project tasks. This procedure uses a stochastic approach where the SD problem is formulated and solved as a two-objective optimization problem under parameter uncertainty intended to assess the Pareto front for trade-offs between sensor cost and the resulting accuracy of hydraulic model [19, 20].

The hydraulic model prediction accuracy has been qualified by a FOSM (First Order Second Moment) method, approximating the relevant parameter and prediction covariance matrices. The optimization problem has been solved by using a multi-objective genetic algorithm.

Applying this methodology at the pilot water distribution network of Castel San Giorgio, a scheme of $N_{max} = 13$ possible sensor locations, including main critical points of the network, has been evaluated referred to the hydraulic model.

In Fig. 3, it is evident that the uncertainty φ_{hydra} in hydraulic head predictions decreases when the number of sensors N_S increases.

φ_{idra}	N_s	S1	S2	S5	S6	S7	S8	S9	S10	S14	S15	S16	S17	S18
1.7629	1	0	1	0	0	0	0	0	0	0	0	0	0	0
0.7911	2	1	1	0	0	0	0	0	0	0	0	0	0	0
0.4431	3	1	1	0	0	0	0	0	0	0	0	0	0	1
0.4158	4	1	1	1	0	0	0	0	0	0	0	0	0	1
0.3833	5	1	1	1	1	0	0	0	0	0	0	0	0	1
0.3699	6	1	1	1	1	0	0	0	0	1	0	0	0	1
0.3527	7	1	1	1	1	0	0	0	0	1	1	0	1	0
0.3292	8	1	1	1	1	0	0	1	0	1	1	0	1	0
0.2950	9	1	1	0	1	1	1	1	0	1	1	0	1	0

Fig. 3. Pareto optimal solutions (φ_{hydra}, N_S) and related schemes of optimal water sensors locations L_{Ns} as sequence of 0,1 where 1 means location to be monitored and 0 to be not monitored.

By analysing the table of Fig. 3 it is possible to observe that the uncertainty value corresponding to the 2-sensors scheme decreases about 45% compared to 1-sensor scheme and the value corresponding to the 3-sensors scheme further decreases about 56%. While, by increasing the sensor number ($N_s > 3$), the model calibration accuracy increases more slowly.

Anyway optimal 9-sensors scheme given by the sequence {S_1, S_2, S_6, S_7, S_8, S_9, S_{14}, S_{15}, S_{17}} reduces significantly the pressure predictions uncertainty.

Through the proposed SD procedure, the water supplier of the pilot network Castel San Giorgio knows the optimal scheme for an effective monitoring of hydraulic parameters along the water distribution network.

3.3 Interdependence Between Power and Water Supply Networks

The analysis of the interdependence between the electricity power supply network and the water distribution network is conducted through a heuristic approach, according to which specific "cases" are accounted for and analysed. On the basis of the results related to these, an explanation or a general rule is sought. The "cases" that are selected are identified as failure scenarios of the power supply network. The impacts that these determine on the water distribution system are then investigated through the combination of a hydraulic simulation model and a reliability analysis of the hydraulic parameters.

In a water distribution network it is possible to identify a set of physical components (pipes, valves, reservoirs, tanks). Among these, there are some that require electrical power for their operation, in particular pumps. The latter can be used as a connection between the different tanks located in a city network, or as machines necessary for the extraction of the volumes of water from wells and aquifers. Pumps operation is

schematized, together with that of the pipes, valves and tanks, as part of a hydraulic simulation model that allows to assess how the regular operation of the pumps affects the hydraulic behaviour of the network. This is generally pursued by a critical link analysis, that is by studying the distribution of pressures in the nodes of the water supply network and of the flow rates within the network pipes. Hydraulic pressure must be contained within certain limits, minimum and maximum, so that it can be said that the operation of the network is reliable. Flow rate must, on the one hand, satisfy the users' water demand, and on the other provide the distribution of flow velocity within the network, which is another parameter used to measure the reliable hydraulic behaviour.

Through an appropriately calibrated hydraulic simulation model, it will then be possible to verify how a failure of a component that requires electrical power supply, e.g. a pump, affects the hydraulic behaviour of the network. The quantitative assessment of the interdependence between the two critical infrastructures arises from the comparison between the distributions of nodes hydraulic pressures and pipes flow rates in the case of the ordinary scenario (when no failure of the power supply is accounted for) and those relating to the particular failure scenario studied.

With reference to the case study of the Castel San Giorgio network, the water distribution network is fully fed by three boreholes, for which pumps operation are required (Fig. 4). Additional pumps are also located on the connections between some of the tanks belonging to the water supply network. The system is therefore extremely vulnerable to failures in the power supply infrastructure. This consideration is also the reason why the case study was selected for the applications related to the RAFAEL project.

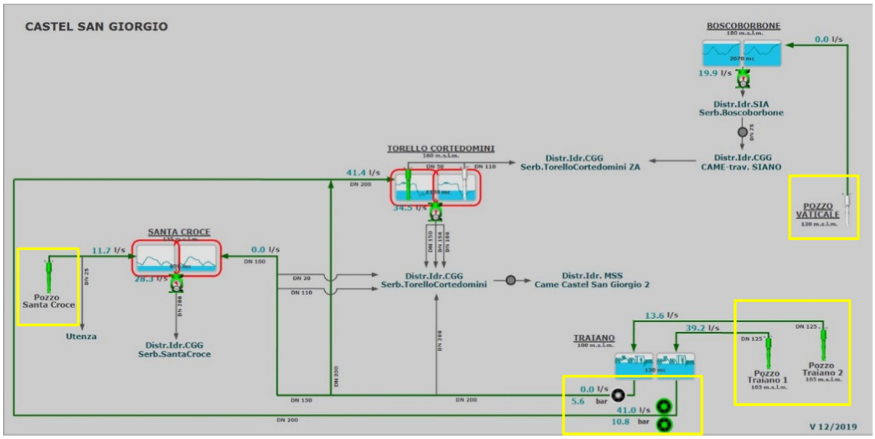

Fig. 4. Castel San Giorgio municipality water distribution network remote control. The location of pumps is highlighted by yellow boxes.(Color figure online)

Among the numerous scenarios of power supply failure, the one involving to a general and total interruption of the power supply would be associated to the largest impact. This scenario is identified as "black out 6–16", meaning with this wording that the pumps are out of operation from hours 6 to 16 of the day, or for a period which, compared with the filling times of the network tanks, it can be considered quite long.

In this scenario, therefore, the filling of the tanks by the boreholes does not take place, causing a significant reduction in the available water resources volume to be supplied to the municipality.

As an example, the results of the hydraulic simulations, carried out with the software EPANET2.0 software (United States Environmental Protection Agency), are reported in relation to a non-dimensional index which represents the availability of hydraulic pressure relative to the assigned water demand. Figure 5 illustrates the trends of the index, DC, for two different network nodes. In particular, a "baseline" scenario, i.e. of ordinary operation, is compared with the "blackout 6–16" which we have said is the heaviest of the possible failure scenarios. The DC index ranges between 0 and 1, which correspond respectively to no or maximum reliability in the operation of the network. In the case of the ORC24857 node (Fig. 5 right panel), the DC index in the baseline simulation assumes rather high values, between 1 and 0.94, indicating a node whose hydraulic pressure can be considered almost stationary and optimal during the day. On the contrary, the node OCR23478 (Fig. 5 left panel), already in the baseline simulation, shows rather low and highly variable values during the day, ranging between 0.54 and 0.76. While in the case of the ORC24857 node the blackout simulation, while determining a maximum reduction of the index of 11%, at 3 pm, leads to DC values that are still adequate for reliable operation, in the case of the OCR23478 node, the simulation of blackout leads to maximum reductions in the index equal to 13% (comparable with node ORC24857), but probably inadequate for the reliable performance of the service, or for the supply of the given water demand.

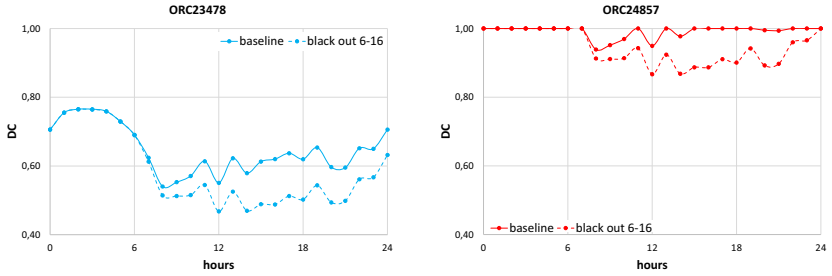

Fig. 5. Nodal pressure during the baseline scenario (solid line) and during the blackout scenario (dashed lines) at two nodes of the Castel San Giorgio water distribution network.

4 Conclusions

RAFAEL on-going activities deal with the risk analysis and protection of numerous CI. The CIPCast platform has been exploited to produce expected damage scenarios for the monitored CIs, both in operational and simulation modes [21]. In particular, CIPCast outputs can be used to produce critical scenarios focusing on cascading effects, in order to evaluate how a failure power network could impact on the operational level of the WDN.

To this end, the water supply network issue has been approached in the presented research with a specific reference to the interdependence between the power supply and the water distribution networks at the city scale. The presented methodology consists of a heuristic approach, according to which specific "cases", e.g. failure scenarios of the power supply network, are accounted for and the relevant impacts that these determine on the water distribution system are then investigated through the combination of a hydraulic simulation model and a reliability analysis of the hydraulic parameters. The methodology has been applied to the Castel San Giorgio water distribution network and, as an example, summary results for the most severe scenario were presented. By comparing failure scenarios with a baseline scenario, describing an ordinary operation case, the reported methodology represents a planning tool for the design of management rules devoted to the mitigation of power supply failure events on the water distribution system.

Acknowledgments. The research activities described in the present paper have been carried out in the framework of the RAFAEL project, co-funded by Italian Ministry of University and Research, MUR, Grant no. ARS01_00305.

References

1. Baloye, D.O., Palamuleni, L.G.: Urban critical infrastructure interdependencies in emergency management: findings from Abeokuta Nigeria. Disaster Prev. Manage. **26**(2), 162–182 (2017)
2. Griot, C.: Modelling and simulation for critical infrastructure interdependency assessment: a meta-review for model characterization. Int. J. Crit. Infrastruct. **6**(4), 363–379 (2010)
3. Chou, C.-C., Tseng, S.-M.: Collection and analysis of critical infrastructure interdependency relationships. J. Comput. Civ. Eng. **24**(6), 539–547 (2010)
4. Moriconi, C., Pollino, M., Rosato, V.: La protezione delle Infrastrutture Critiche e il controllo del territorio. Energia ambiente e innovazione **1**, 52–57 (2017)
5. Luiijf, E., et al.: Empirical findings on critical infrastructure dependencies in Europe. **5508**(2009), 302-310 (2009)
6. Varianou Mikellidou, C., Shakou, L.M., Boustras, G., Dimopoulos, C.: Energy critical infrastructures at risk from climate change: a state of the art review. Safety Sci. **110**, 110–120 (2018)
7. Rosato, V., Di Pietro, A., La Porta, L., Pollino, M., Tofani, A., Marti, J.R., Romani, C.: A decision support system for emergency management of critical infrastructures subjected to natural hazards. In: Panayiotou, C.G.G., Ellinas, G., Kyriakides, E., Polycarpou, M.M.M. (eds.) Critical Information Infrastructures Security. LNCS, vol. 8985, pp. 362–367. Springer, Cham (2016). https://doi.org/10.1007/978-3-319-31664-2_37
8. Omidvar, B., Hojjati Malekshah, M., Omidvar, H.: Failure risk assessment of interdependent infrastructures against earthquake, a Petri net approach: case study-power and water distribution networks. Nat. Hazards **71**(3), 1971–1993 (2014)
9. Fattoruso, G., et al.: Modeling electric and water distribution systems interdependences in urban areas risk analysis. In: COWM 2nd International Conference Citizen Observatories for Natural Hazards and Water Management, Venice, pp. 222–225 (2018)
10. RAFAEL. https://www.progetto-rafael.it/. Accessed 12 May 2021

11. Di Pietro, A., Lavalle, L., La Porta, L., Pollino, M., Tofani, A., Rosato, V.: Design of DSS for supporting preparedness to and management of anomalous situations in complex scenarios. In: Setola, R., Rosato, V., Kyriakides, E., Rome, E. (eds.) Managing the Complexity of Critical Infrastructures. SSDC, vol. 90, pp. 195–232. Springer, Cham (2016). https://doi.org/10.1007/978-3-319-51043-9_9
12. Taraglio, S.: A Lombardi: decision support system for smart urban management: resilience against natural phenomena and aerial environmental assessment. Int. J. Sustain. Energy Plann. Manage. **24** (2019)
13. Matassoni, L., Giovinazzi, S., Pollino, M., Fiaschi, A., La Porta, L., Rosato, V.: A geospatial decision support tool for seismic risk management: florence (Italy) case study. In: Gervasi, O. (ed.) Computational Science and Its Applications – ICCSA 2017. LNCS, vol. 10405, pp. 278–293. Springer, Cham (2017). https://doi.org/10.1007/978-3-319-62395-5_20
14. Gervasi, O. (ed.): Computational Science and Its Applications – ICCSA 2017. LNCS, vol. 10404. Springer, Cham (2017). https://doi.org/10.1007/978-3-319-62392-4
15. Modica, G., et al.: Land suitability evaluation for agro-forestry: definition of a web-based multi-criteria spatial decision support system (MC-SDSS): preliminary results. In: Gervasi, O. (ed.) Computational Science and Its Applications -- ICCSA 2016. LNCS, vol. 9788, pp. 399–413. Springer, Cham (2016). https://doi.org/10.1007/978-3-319-42111-7_31
16. Ottobrino, V., Esposito, T., Locoratolo, S.: Towards a smart water distribution network for assessing the effects by critical situations in electric networks. the pilot case of Castel San Giorgio. In: 21th International Conference on Computational Science and its Application, RRS2021 Workshop, Cagliari, Italy (2021)
17. Agresta, A., et al.: Applying numerical models and optimized sensor networks for drinking water quality control. Proc. Eng. **119**, 918–926 (2015). ISSN 1877-7058
18. Fattoruso, G., Agresta, A., Guarnieri, G., Toscanesi, M., De Vito, S., Fabbricino, M., Trifuoggi, M., Di Francia, G.: A software system for predicting trihalomethanes species in water distribution networks using online networked water sensors. In: Di Francia, G. (ed.) Sensors and Microsystems. LNEE, vol. 629, pp. 417–423. Springer, Cham (2020). https://doi.org/10.1007/978-3-030-37558-4_62
19. Behzadian, K., Kapelan, Z., Savic, D., Ardeshir, A.: Stochastic sampling design using a multi-objective genetic algorithm and adaptive neural networks. Environ. Model. Softw. **24**(4), 530–541 (2009)
20. Fattoruso, G., et al.: Optimal sensors placement for flood forecasting modelling. Proc. Eng. **119**, 927–936 (2015). ISSN 1877-7058
21. Gervasi, O. (ed.): Computational Science and Its Applications – ICCSA 2020. LNCS, vol. 12251. Springer, Cham (2020). https://doi.org/10.1007/978-3-030-58808-3