Low-Cost Smart Indoor Greenhouse for Urban Farming

Melisa Acosta-Coll[1](✉), Daniel Anaya[1], Luis Ojeda-Field[1], and Ronald Zamora-Musa[2]

[1] Universidad de la Costa, Barranquilla, Colombia
macosta10@cuc.edu.co
[2] Universidad Cooperativa de Colombia UCC, Bucaramanga, Colombia

Abstract. Currently, people want to take control of what they consume as well as the local authorities pursue to implement measures to improve sustainability, food security, and living standards. Indoor urban farming initiatives provide an opportunity to grow their own and obtain fresher food with fewer transportation emissions, likewise, it is a strategy to lift people out of food poverty, reduce environmental impact since the use of herbicides and pesticides is minimal and helps to reduce food waste. However, factors such as the time dedicated to the cultivation of plants, and the adequate space inside their houses prevents them from carrying out this activity.

This project presents the design of a low cost smart indoor greenhouse design to cultivate herbs and vegetables with minimum human intervention monitored by a web application. The prototype has three systems to control and monitor the main variables involved in the plant's growth such as soil moisture, temperature, and solar light intensity. Likewise, it is suitable for a home with little space and it is easily installable, has low energy consumption, and is cost-efficient.

Keywords: Indoor greenhouse · Smart greenhouse · Urban farming

1 Introduction

The global food crisis has brought the attention of many governments about food supply and security, especially in the cities since most of them import more than 90% of its food. Urban farming arises in this time as an alternative to local produce, and by 2030 it could produce 30% of the food supply in cities [1]. Highly populated cities worldwide are placing enormous demands on urban food supply systems and raise concerns about food security and unemployment [2]. Urban and Peri-Urban agriculture (UPA) arise as a strategy to supply the food consumption for city dwellers and at the same, generates employment, provide training opportunities for disadvantaged and marginalized groups, enhanced access to fresh fruit and vegetables [3, 4]. Likewise, it reduces environmental impacts through less transport, packaging, and storage and strengthens cities' resilience to climate change [5].

This type of farming includes the growth of agricultural products and the raising of animals within and around cities. It can be in indoor or outdoor environments and

© Springer Nature Switzerland AG 2021
O. Gervasi et al. (Eds.): ICCSA 2021, LNCS 12952, pp. 120–132, 2021.
https://doi.org/10.1007/978-3-030-86973-1_9

developed by small-specialized producers or large scale farming in the urban areas [6, 7].

Farming in outdoor environments is susceptible to significant risks such as attacks from pests, droughts, floods, and high winds. It also requires the use of pesticides that can introduce real health risks [8]. However, cultivation under controlled indoor environments constitutes a more efficient option for the production of edible products since it will not require the use of pesticides and allows only the amount of water and nutrients needed by the plants to be applied [9].

Most of the indoor urban farming projects worldwide use technology to provide optimal growing conditions of crops or plants in indoor environments and optimize the use of resources such as water, energy, nutrients, and space [10] and there are two main viable options, vertical farming, and greenhouse. The primary function of a greenhouse is to recreate the appropriate conditions to give life and generate the reproduction of plants, whether they are edible (such as fruit and vegetables), or for medicinal purposes, simulating optimal physicochemical conditions of temperature, carbon dioxide, and humidity (among others) for the proper care and growth that these plants require [11].

On the other hand, vertical farming consists of growing crops in a controlled environment based on vertically stacked layers design [12]. Greenhouses and vertical farms have different benefits for indoor urban farming and should be selected according to available space, product type, human resources, and other requirements [13].

This project presents the design of an indoor greenhouse for the cultivation of herbs and vegetables that automatically monitors and controls the main variables related to the plant's growth. This greenhouse is ideal for homes with little space due to its size and portability, also for users with little knowledge in plant cultivation and who have no time for it.

Below we review some indoor greenhouse system architectures for urban farming identifying the sensors and actuators to monitor and control the environment.

In Indonesia, Kaburuan *et. al* developed a system for monitoring the performance of indoor micro-climate that can help farmers grow crops using electronic sensors connected to an Internet-of-Things (IoT) board [9]. Figure 1 illustrates the architecture system.

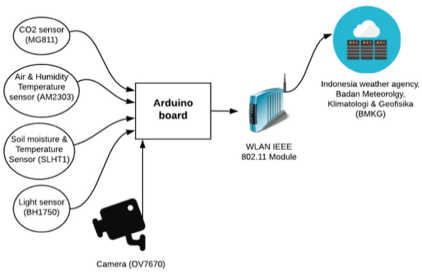

Fig. 1. IoT-based indoor greenhouse

The CO2 sensor (MG811) is a low-cost sensor used as an air pollution detector, the air humidity temperature sensor (AM2303) measures the temperature and humidity

every 2 s and the light sensor (BH1750) provides high-resolution reading with small measurement variation. Likewise, the soil sensor module is a low-cost protected built-in soil temperature and humidity sensor and the OV767 camera module is s a single-chip 640 × 480 that can capture good still image. Furthermore, an Arduino board equipped with a WLAN IEEE 802.11 module with full TCP/IP to transmit all the sensors reading to the server controls the greenhouse. As future work, it will be implemented actuators such as fan and air conditioning for temperature control and an automated watering system for dehydration and humidity. Likewise, it will be implemented an automated fertilizer and lighting system that will use a machine-learning algorithm to automated control of the horticulture process.

A project developed in India by Pandit and Mancharkar measures and automatically controls conditions of a greenhouse environment conditions such as temperature, humidity, light intensity, and soil moisture by using different types of sensors [14]. Figure 2 shows the general system architecture.

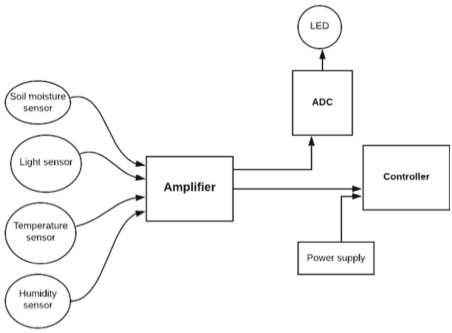

Fig. 2. Greenhouse environment conditions system monitoring

The system monitors and controls the greenhouse temperature according to a value set by the user and displays the information on an LED screen. When the temperature exceeds the value set, a fan placed inside of the greenhouse turns on and reduces the temperature. When the temperature decreases under the set value, a heater placed at the floor of the greenhouse turns on and warms the greenhouse equally.

The system has a light control and used an LDR to detect the light falling on the greenhouse. When there is not enough light the light bulbs are switched ON and turns off when there is lighter the light bulbs are turned OFF. Also, a switch was placed to turn off the lights at night to avoid harmful effects on the plants.

The humidity level monitoring system monitors and it maintains around a predefined value. When the system detects the drop in humidity level the pipelines installed inside the greenhouse allows water to floor. The pipes contain small hoes and hence allow water to reach the soil quickly. When the humidity level reaches the correct value the system OFFS the motor and flow of water stops.

In Indonesia, Chitti and Ktha developed a greenhouse gases and energy monitoring system integrating into an ARM logically small scale controller a CO2 sensor (MG-811), a CO sensor (MG-7), temperature sensor (LM-35) and humidity sensor (Sy-Sh-220) [15].

An XBee pro remote module connected to the ARM controller sends the acquired data to a base station that uses another Xbee Pro to get the data. Figure 3 shows the system architecture.

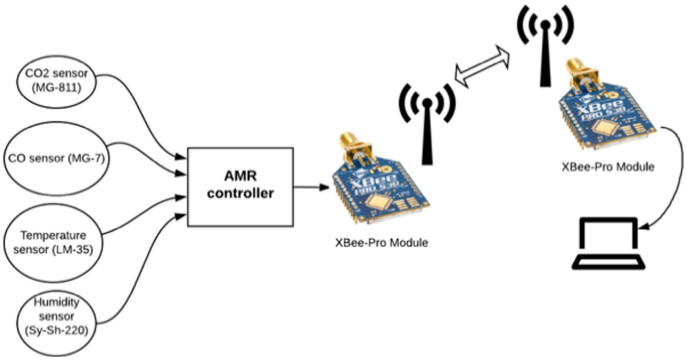

Fig. 3. Greenhouse gases and energy monitoring system

Another automated greenhouse for small-scale cultivation developed in Mexico by Salazar-Aguilar, used five different sensors connected to an Arduino controller to monitor and control the greenhouse environmental conditions [16]. The system has a humidity and temperature sensor (DHT 11, DHT22), an LDR as a light sensor, a hygrometer (FC-28) to measure the soil moisture and, a barometric sensor (BMP280) to measure atmospheric pressure. Figure 4 shows the automated greenhouse.

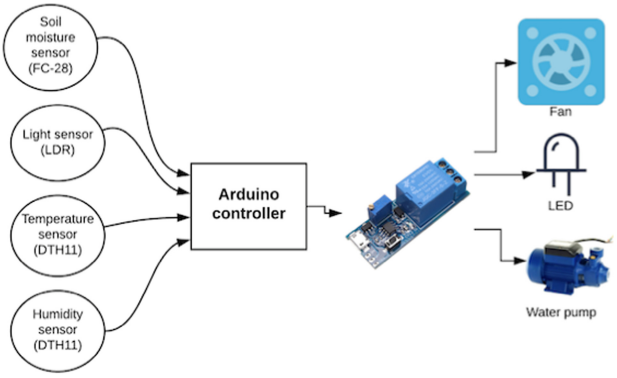

Fig. 4. Automated greenhouse for small-scale cultivation

For this system, when the temperature exceeds the temperature range, the relay will activate the fan; conversely, when the temperature is below the set temperature range, the relay turns on the led lamp. On the other hand, to maintain the desired humidity levels, the system activates a water pump when the humidity sensor (hygrometer) is removed from the soil and begins to water the plant.

Considering the reviewed projects and identifying the sensors and actuators to monitor and controlled the most important environmental variables that influence plant growth, a low-cost smart indoor greenhouse for growing herbs and small vegetables were developed. This indoor greenhouse is suitable for houses with little space, as well as for users with little knowledge in cultivation since its system facilitates the monitoring and control of variables in an automated way. The following sections describe the design and the greenhouse system architecture, as well as the system's performance.

2 Materials and Methods

The presented indoor greenhouse has three systems connected to an Arduino board that measurements soil moisture, temperature, and luminosity inside the green-house and manages the operation of different mechanical and electrical actuators automatically to controls these variables within the plant's tolerance range. The first system controls the soil moisture through a drip irrigation system; the second system controls the temperature inside the greenhouse and activates a ventilation system when it is necessary. The third system measures the light intensity activating a lighting system when the solar light is not good enough for the plant. Finally, a web app allows users to monitor remotely the variables and receive alerts. Figure 5 illustrates the general system architecture.

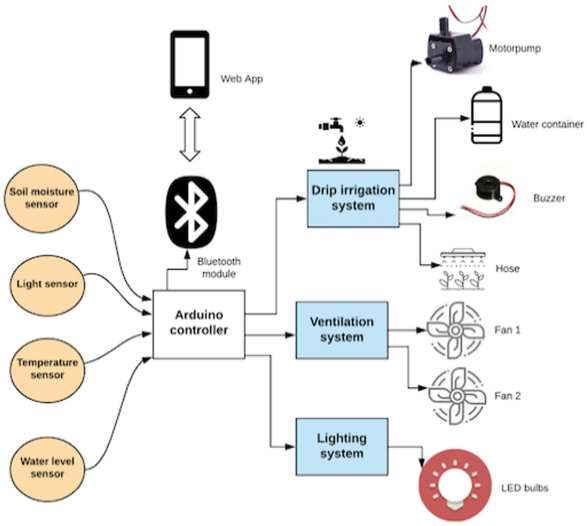

Fig. 5. Indoor greenhouse general system architecture

The control system follows a cyclic control logic programmed in ARDUINO to perform all the necessary actions for greenhouse automation. The central control system receives all the measurements and manages the operation of the different mechanical and electrical actuators. Through this primary system, the orders for each of the subsystems are established. In this particular case, it uses a feedback control system or closed circuit,

where the output signals of the different sensors can modify the signals emitted by the ARDUINO.

The greenhouse control system aims to preserve the integrity of the crop, as well as promotes the energy efficiency of the final prototype and activates the subsystems in a range of 7 am-7 pm; if in that time range any need is detected by the crop, the corresponding subsystem will act, outside this range it will not execute any action.

This measure does not affect any of the variables involved in plant growth since the crops need only approximately 12 h of sunlight for optimal development. Also, the supply of artificial light higher than necessary could cause irreparable damage to the crop [17]. In the case of irrigation and ventilation subsystems, it will prevent the wear of mechanical actuators such as relays, motor pumps, among others.

The first action the system executes is to read the time; if the time is within the activation range (7 am – 7 pm), read the temperature sensor measurement. When the temperature measurement is above the plant's tolerance range, the control system activates the fans and proceeds to read the light intensity measurement.

If the light intensity value is below the set range, it activates the lighting system and proceeds to read the soil moisture. When the soil moisture is lower than the set value, it enables the drip irrigation system.

The ventilation system will be deactivated when the temperature inside the greenhouse is within the tolerance range of the plant, also, the lighting system will turn off the bulbs when the entire system is deactivated or the plant receives the amount of light it needs. Finally, the irrigation system will be deactivated when the substrate reaches the desired humidity.

Following, it will be described the physical construction of the greenhouse and the operation of each of the systems.

2.1 Greenhouse Physical Design

The main physical characteristics of this indoor greenhouse are that it is easy to move due to its weight; also, its size is suitable for the growing of herbs and small vegetables in places with little space. The structure has dimensions of 60 cm × 60 cm with a

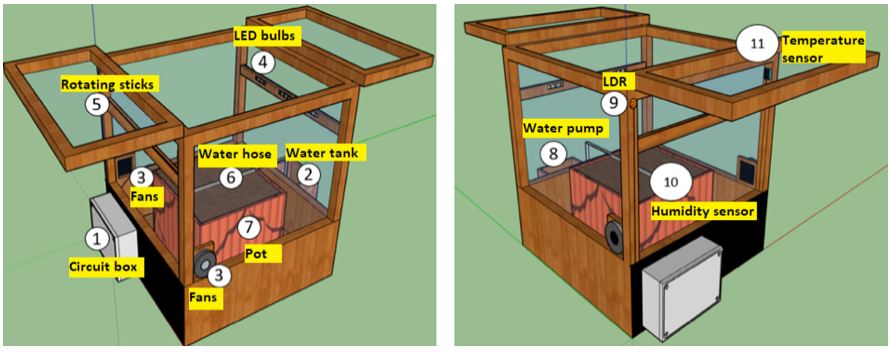

Fig. 6. A Greenhouse prototype parts B Prototype Model

superior opening system that allows the user easy access to the crop. Figure 6 shows the greenhouse prototype parts and Fig. 7 the greenhouse prototype.



Fig. 7. Greenhouse prototype

2.2 Lighting System

The lighting system has an LDR (light dependent resistance) that measures the amount of light that falls on the greenhouse and a set of LED bulbs installed on two rotating sticks. The control system compares the measured value with a value set by programming that allows the optimal plant growth with the amount of light the plant needs daily; if the obtained measurement is below the established range, activates the set of LED bulbs. To increase the incidence intensity and improve photosynthesis, the LED lights are installed on two rotating sticks that varies the light exposure angle in a range of 0° – 180°. The lighting system deactivates the light bulbs when the light intensity value is higher than the value set in the control system or when it is outside the system activation time (7 a.m – 7 p.m).

2.3 Drip Irrigation System

The greenhouse controls the soil moisture through a drip irrigation system that helps water, fertilizers, and nutrients can reach the roots of plants effectively. This drip irrigation system has a hygrometer (humidity sensor), a motor pump, a plastichose, a water tank, and a water level sensor. The hygrometer module measures every 4 h the soil moisture, if it is below the range, the Arduino controller activates the motor pump inside the tank, and it is deactivated when the ground reaches the desired humidity. Water is pumped from the tank to the plant roots using a fish pump and to prevent damages, the greenhouse has a water level system constituted by an integrated ULN2803 whose

terminals are inside the tank. If the water level is below 15 cm, a buzzer emits a warning sound and will be deactivated when the tank is full again.

2.4 Ventilation System

The ventilation system measures the temperature and air humidity inside the greenhouse using a DTH11 sensor that measures the temperature each hour, and two fans installed whose purpose is to recirculate the air inside the greenhouse. This system is not designed for massive temperature decrement, but to recirculate the air inside the greenhouse. If the temperature exceeds the tolerance range, the control system activates the fans, one fan drives air into the interior and the other pulls it out, that is, a mechanical ventilation-extraction ventilation system.

2.5 Remote Warning System

A web application visualizes in the temperature, air humidity, soil moisture, and the light intensity of the greenhouse. This application was designed and compiled on the free APP INVENTOR website initially for Android. If the temperature inside the greenhouse exceeds the set range, the temperature module turns red and indicates the user should relocate the greenhouse to a colder place. Likewise, when the water tank is low, the soil moisture module turns red and shows the user to fill up the tank. If the light intensity is higher than the plant's needs, the light intensity module turns red indicating the user to relocate the greenhouse.

3 Results and Discussion

For each of the systems, measurements are made separately and in conjunction with the prototype. The tests and measurements obtained for each system are described below.

3.1 Lighting System Test

The measurements of the lighting system were made in inside and outside a house in Barranquilla (Colombia) to be able to set the light intensity threshold. This city is located in the Caribbean region of the Colombia, and during the course of the year, the temperature generally ranges from 24 °C to 32 °C and rarely drops below 23 °C or rises above 34 °C.

These measurements were performed with a sunny sky from 8 am to 5 pm with a temporal resolution of 20 min. Figure 8 shows the measurements inside and outside the house.

Considering the data obtained from Fig. 8, an optimum light intensity range for the plant was set between 15% – 82%; if the system measures values lower than 15%, it activates the artificial lighting system. This criterion was used to choose the characteristics of artificial lights, where the light intensity provided by artificial lights will not exceed 25% of the values obtained in broad daylight.

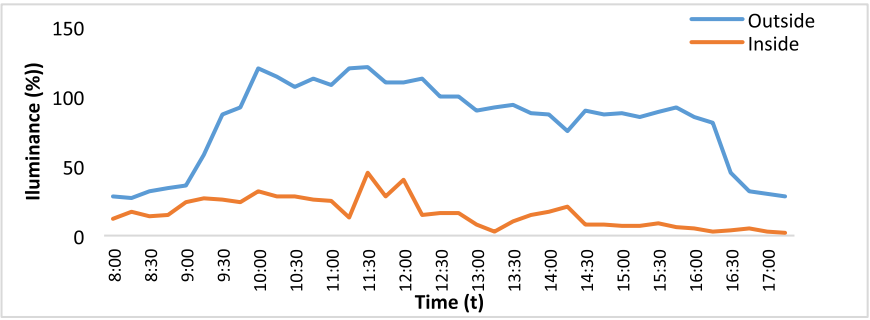

Fig. 8. Light intensity measurements inside the house.

3.2 Drip Irrigation System Test

The drip irrigation system tests were performed for three consecutive days in a round pot with an area of 0.4 m^2 to measure the relative soil moisture (RSM) before introducing the hygrometer tip inside a black sand substrate. A plastic hose with diffusion points was placed superficially on a substrate of black sand and connected to a plastic bottle filled with 500 ml of water and raised manually so that by gravity the water would lower. Figures 9 shows the results of measurements of days 1, 2 and 3, respectively.

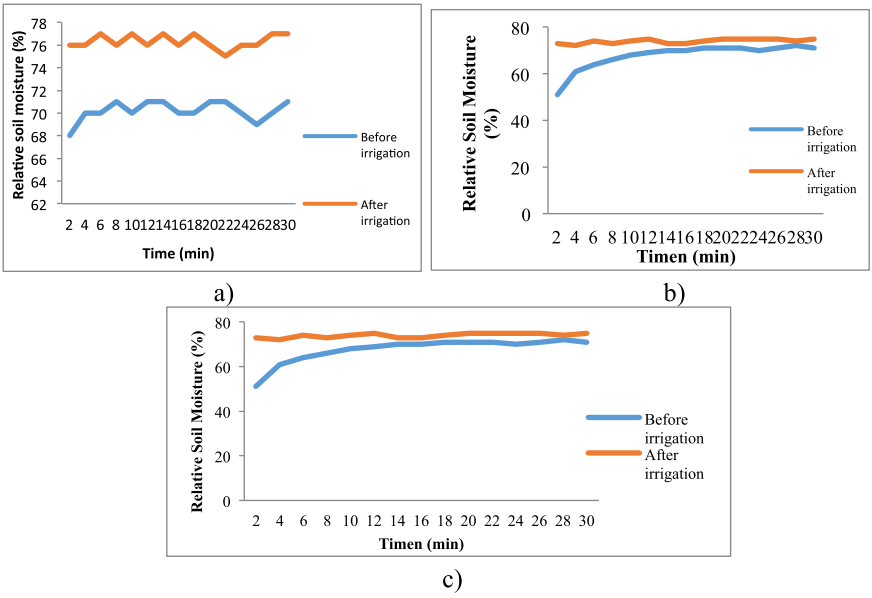

Fig. 9. Relative soil moisture measurements a) Day 1. b) Day 2. c) Day 3

From Fig. 9, it was established that when the soil moisture is below 70%, the irrigation system is activated and deactivated when it reaches a humidity of 76%. Also, the system will be deactivated when it is outside the operating range.

3.3 Ventilation System Test

The greenhouse ventilation system is associated with the measurement of temperature inside it. For two consecutive days, the temperature was measured to observe the behavior of the thermal load inside it, and to determine the forced ventilation requirements. Figure 10 shows the temperature measurements inside the greenhouse.

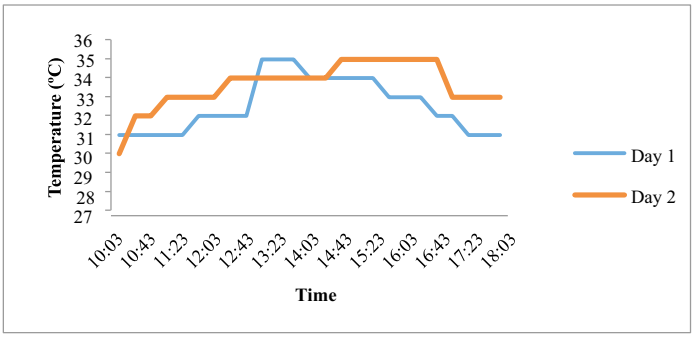

Fig. 10. Ventilation system test results

Although the previous measurements were made inside the house and in a place in the shade, the acquired temperature values are high and without proper air circulation, can damage the plant. Therefore, it is necessary to use fans to recirculate the air, with this; the objective is to avoid suffocation of the plant if there is a temperature spike that could negatively affect the development of the plant. With forced ventilation, air recirculation is also sought to remove CO2.

This prototype of indoor greenhouse is an efficient solution for people who do not have a large space at home, who have little knowledge and who do not have much time to care for the crop since the greenhouse automatically performs all the vital functions of care that a crop requires and it only needs human intervention to fill the water tank. Likewise, the system design allows better use of water and nutrients through the irrigation system, increases photosynthesis with the lighting system, and maintains the proper temperature for plant growth. As future work, the aim is to improve the structural design using lighter and more weather-resistant materials and implement a photovoltaic system for power supply.

4 Conclusions

Currently, governments and institutions around the world are investing millions in indoor urban farms projects, since it can produce more food with less impact. Likewise, the global food crisis has sparked citizens' interest in growing their food but many face obstacles such as costs, space limitations, and time dedicated to cultivation. To provide an optimum solution, this manuscript presents the design of an automated low-cost indoor greenhouse prototype for urban farming suitable for little space homes. Unlike

other indoor greenhouse prototypes, this system automatically monitors and controls the main variables involved in plants growth with the least user intervention since it a plug and play design.

The system monitors and controls the temperature and lighting that the plant needs inside the greenhouse, as well as the soil moisture through a drip irrigation system where the user through a web application can monitor these actions, as it can be easily programmed with the ARDUINO board.

From the irrigation system, it was determined that due to the capillarity of the ground, the water spreads equally across the length and width of the ground. It was determined that the best place to install the hygrometer is one half (1/2) of the distance between the hose and the wall or edge that is parallel to it, this being the edge of the planter. Likewise, it was determined that the position of the greenhouse has a decisive factor in the lighting conditions of the environment. The measurements indicated that the use of artificial lighting was necessary, because in no place indoors is it possible to provide the minimum hours of light that plants require and with the light intensity that they also require because the natural light that reaches the indoor green-house is always by reflection and diffusion.

Finally, it was necessary to install fans that could recirculate the air in the room, with this it was sought to avoid suffocating the plant; additionally, forced ventilation also seeks to renew the air since the plants emanate CO2 and it is necessary that they have fresh air for their breathing.

As future work, the aim is to improve the structural design using lighter and more weather-resistant materials and implement a photovoltaic system for power supply.

References

1. Thompson Reuters Foundation: ANALYSIS-Urban farms to traffic bans: cities prep for post-coronavirus future. Thompson Reuters Foundation News, 21 April 2020
2. De Bon, H., Parrot, L., Moustier, P.: Sustainable urban agriculture in developing countries. A review. Agron. Sustain. Dev. **30**, 21–32 (2010)
3. Farhangi, M., Turvani, M., Van der Valk, A., Carsjens, G.: High-tech urban agriculture in Amsterdam: an actor network analysis. Sustainability **12**(10) (2020). https://doi.org/10.3390/su12103955
4. Zanele Khumalo, N., Sibanda, M.: Does urban and peri-urban agriculture contribute to household food security? An assessment of the food security status of households in Tongaat, eThekwini Municipality. Sustainability **11**(14) (2019). https://doi.org/10.3390/su11041082
5. Zasad, I.: Multifunctional peri-urban agriculture—a review of societal demands and the provision of goods and services by farming. Land Use Policy **28**(4), 639–648 (2011)
6. Orsini, F., Kahane, R., Nono-Womdim, R., Gianquinto, G.: Urban agriculture in the developing world: a review. Agron. Sustain. Dev. **33** (2013)
7. Pearson, L.J., Pearson, L., Pearson, C.J.: Sustainable urban agriculture: stocktake and opportunities. Int. J. Agric. Sustain. (2010). https://doi.org/10.3763/ijas.2009.0468
8. Pinstrup-Andersen, P.: Is it time to take vertical indoor farming seriously?. Glob. Food Secur. **17**, 233–235 (2018)
9. Kaburuan, E.R., Jayadi, R., Harisno: A design of IoT-based monitoring system for intelligence indoor micro-climate horticulture farming in Indonesia. In: Procedia Computer Science, pp. 459–464 (2019)

10. Goodman, W., Minner, J.: Will the urban agricultural revolution be vertical and soilless? A case study of controlled environment agriculture in New York City. Land Use Policy **83**, 160–173 (2019)
11. Sammons, P.J., Furukawua, T., Bulgin, A.: Autonomous pesticide spraying robot for use in a greenhouse. ISBN 0–9587583–7–9 (2005)
12. Benke, K., Tomkins, B.: Future food-production systems: vertical farming and controlled-environment agriculture. Sustain. Sci. Pract. Policy **13**(1) (2017). https://doi.org/10.1080/15487733.2017.1394054
13. Martin, M., Molin, E.: Environmental assessment of an urban vertical hydroponic farming system in Sweden. Sustainability **11**(15) (2019). https://doi.org/10.3390/su11154124
14. Pandit, A.A., Mancharkar, A.V.: Green house environment monitoring and control system. Int. J. Sci. Eng. Res. **7**(8) (2016)
15. Chitti, S., Ktha, L.S.: Data acquisition of green house gases and energy monitoring system using GSM technology. Int. J. Innov. Technol. Explor. Eng. IJITEE **8** (2019)
16. Salazar-Aguilar, N.: Diseño de un Sistema Inteligente para el Control Automa-tizado de Inveranderos. Universidad Autónoma del Estado de More-los, México, Maestría (2020)
17. Moliner, R., Marsh, H., Heinz, E.: Del carbón activo al grafeno : Evolución de los materiales de carbono. In: Grupo de conversion de combustibles. ICB-CSIC, pp. 2–5 (2016)
18. Richard, M.: El carbón activo ya se fabrica con una estructura diseñada a medida, MIT Technol. Rev. 12 junio (2015)
19. Omo-Okoro, P.N., Daso, A.P., Okonkwo, J.O.: A review of the application of agricultural wastes as precursor materials for the adsorption of per- and polyfluoroalkyl substances: A focus on current approaches and methodologies. Environ. Technol. Innov. **9**, 100–114 (2018). https://doi.org/10.1016/j.eti.2017.11.005
20. Palansooriya, K.N., et al.: Impacts of biochar application on upland agriculture: a review. J. Environ. Manage. **234**(December 2018), 52–64 (2019). https://doi.org/10.1016/j.jenvman.2018.12.085
21. Green Power: Eco friendly technology. El uso de carbón vegetal como fertilizante, 27 July 2018
22. C. Jacobo Mendez Alzamora Consultor Eco-Agricultura. (PGSJ): Carbón en Agricultura – Engormix, 11 septiembre 2017
23. Yuan, C., Feng, S., Huo, Z., Ji, Q.: Effects of deficit irrigation with saline water on soil water-salt distribution and water use efficiency of maize for seed production in arid Northwest China. Agric. Water Manag. **212**(September 2018), 424–432 (2019). https://doi.org/10.1016/j.agwat.2018.09.019
24. Kamcev, J., et al.: Author's accepted manuscript salt concentration dependence of ionic conductivity in ion exchange membranes. J. Membr. Sci. **547**(October 2017), 123–133 (2017). https://doi.org/10.1016/j.memsci.2017.10.024
25. Sadiku, M.N.O., Alexander, C.K.: Fundamentals of Electric Circuits, Third Ed. vol. 91, Bookman (2017)
26. Cotching, W.E., Kögel-Knabner, I.: Organic matter in the agricultural soils of Tasmania, Australia-a review A R T I C L E I N F O, Geoderma **312**(October 2017), 170–182 (2018). https://doi.org/10.1016/j.geoderma.2017.10.006
27. Frouz, J.: Effects of soil macro- and mesofauna on litter decomposition and soil organic matter stabilization. Geoderma **332**(September 2017), 161–172 (2018). https://doi.org/10.1016/j.geoderma.2017.08.039
28. Rostami, S., Azhdarpoor, A.: The application of plant growth regulators to improve phytoremediation of contaminated soils: a review. Chemosphere **220**, 818–827 (2019). https://doi.org/10.1016/j.chemosphere.2018.12.203

29. Piyare, R., Murphy, A.L., Tosato, P., Brunelli, D.: Plug into a plant: using a plant microbial fuel cell and a wake-up radio for an energy neutral sensing system. Proc. - 2017 IEEE 42nd Conf. Local Comput. Netw. Workshop LCN Workshop, pp. 18–25, 2017 (2017). https://doi.org/10.1109/LCN.Workshops.2017.60
30. Hubenova, Y., Mitov, M.: Conversion of solar energy into electricity by using duckweed in direct photosynthetic plant fuel cell. Bioelectrochemistry **87**, 185–191 (2012). https://doi.org/10.1016/j.bioelechem.2012.02.008
31. Atzori, G., Mancuso, S., Masi, E.: Seawater potential use in soilless culture: a review. Sci. Hortic. **249**(January), 199–207 (2019). https://doi.org/10.1016/j.scienta.2019.01.035
32. Yang, S., Wang, Z., Han, Z., Pan, X.: Performance modelling of seawater electrolysis in an undivided cell: Effects of current density and seawater salinity. Chem. Eng. Res. Des. **143**(1037), 79–89 (2019). https://doi.org/10.1016/j.cherd.2019.01.009
33. CANNA Research: Influencia de la temperatura ambiental en las plantas, CANNA España. 15 de marzo (2017)
34. Olubode, O.O.: Influence of seasonal variability of precipitation and temperature on performances of pawpaw varieties intercropped with cucumber. Sci. Hortic. **243**(February 2018), 622–644 (2019). https://doi.org/10.1016/j.scienta.2018.06.007
35. Sánchez-Lucas, R., Fernández-Escobar, R., Suárez, M.P., Benlloch, M., Benlloch-González, M., Quintero, J.M.: Effect of moderate high temperature on the vegetative growth and potassium allocation in olive plants. J. Plant Physiol. **207**, 22–29 (2016). https://doi.org/10.1016/j.jplph.2016.10.001
36. Vegas, J.: Qué ocurre al regar las plantas con agua caliente?, 3 de abril (2016)
37. Ni, J., Cheng, Y., Wang, Q., Ng, C.W.W., Garg, A.: Effects of vegetation on soil temperature and water content: field monitoring and numerical modelling. J. Hydrol. **571**(November 2018), 494–502 (2019). https://doi.org/10.1016/j.jhydrol.2019.02.009