The Impact of Corrosion on the Seismic Assessment of Reinforced Concrete Bridge Piers

Alessandro Rasulo[1(✉)], Angelo Pelle[2], Giuseppe Quaranta[3], Davide Lavorato[2], Gabriele Fiorentino[2], Camillo Nuti[2], and Bruno Briseghella[4]

[1] Department of Civil and Mechanical Engineering, University of Cassino and Southern Lazio, 03043 Cassino, FR, Italy
alessandro.rasulo@unicas.it
[2] Department of Architecture, Roma Tre University, 00153 Roma, Italy
{angelo.pelle,davide.lavorato,gabriele.fiorentino, camillo.nuti}@uniroma3.it
[3] Department of Structural and Geotechnical Engineering, Sapienza University of Rome, 00184 Rome, Italy
giuseppe.quaranta@uniroma1.it
[4] College of Civil Engineering, Fuzhou University, Fuzhou 350108, China
bruno@fzu.edu.cn

Abstract. Reinforced Concrete (RC) bridges are a key elements for any transportation network, so that their safety and serviceability is of crucial importance especially after the occurrence of a seismic event. Frequently, RC bridges are exposed to the action of aggressive chemicals, such as in marine or in cold climate environments, for the presence of chloride ions, either due to the salty water or the use of deicing salt. Generally those aggressive environmental actions affect the steel rebars inducing corrosion phenomena with a degradation the mechanical properties of reinforcement. In this paper some modeling issues related to corroded RC piers are presented and discussed, with particular emphasis to their seismic assessment.

Keywords: Earthquake engineering · Bridges · Seismic assessment · Reinforced Concrete · Rebar corrosion

1 Introduction

In most of the earthquake-prone European countries like Italy, the seismic vulnerability of road infrastructures is a topic of serious economic and social concern [16, 17, 24]. The most vulnerable elements within a road network are indubitably the bridges.

Due to the fact that the infrastructures have been built in the economic boom after the Second World War (from late 1950s to early 1960s), when most of the territory was not yet recognized to be subject to earthquakes, in the design process the seismic action was completely neglected. Even when the sites were classified as seismically prone, the

© Springer Nature Switzerland AG 2021
O. Gervasi et al. (Eds.): ICCSA 2021, LNCS 12950, pp. 718–725, 2021.
https://doi.org/10.1007/978-3-030-86960-1_56

level of the seismic demand was much lower than the one currently adopted in design codes [2, 5, 6, 22, 23, 25, 26].

Furthermore, details should be considered substandard according to modern design practice. The stirrup spacing in the piers of existing bridges exceeds the maximum stirrup spacing limit in current seismic design codes. According to the reconnaissance surveys on structures damaged during recent severe earthquake, the longitudinal steel rebars have been found to have buckled due to the insufficient confinement offered by cover concrete and transversal stirrups.

Finally, since existing bridges have been functional along the infrastructures for an extended period of time, their performances can be affected by specific aging factors that may have induced degradation phenomena in the materials. In the case of reinforced concrete bridge piers, corrosion of steel rebars is undoubtedly the most important degradation phenomenon for RC bridges piers, due to the chloride ion attack from marine, airborne and deicing sources.

The corrosion phenomena influence directly the mechanical properties of steel rebars in terms of strength and ductility, negatively affecting the serviceability and capacity of RC bridges and increasing their vulnerability in earthquakes.

The most common corrosion morphologies over steel rebars may be either uniform or localized. The former is mainly due to carbonation and reduces equally the diameter of the steel bars over its full length, while the latter, mainly due to the action of chloride ions penetrated in concrete, is characterized by localized cavities and notches, known as pits, over the reinforcing surface. Pitting corrosion may appear in a heterogeneous way along the length of the reinforcement resulting in a more severe attack than a uniform one. Localized cavities, in fact, not only reduce the strength of the reinforcing bars but also their ductility. Indeed, if the steel bar is stretched by a tensile force, the deformation will be concentrated in deeper notches. Thus, the overall elongation will be developed in small zones and, consequently, the average strain will be less at failure compared to an uncorroded bar.

When compressed, longitudinal bars, if not properly retained by transversal reinforcement, may buckle and corrosion is expected to increase the likelihood of premature bar buckling, by reducing the average bar diameter and increasing the buckling length of reinforcement. Even though Pelle et al. [19] showed that the pattern of corrosion may or may not lead bar buckling depending on the pit configuration. In addition, the transversal reinforcement is less protected by the concrete cover, so that is subjected to corrosion more than longitudinal one, therefore corroded stirrups have a reduced ability to retain the longitudinal reinforcement, making easier local and global bar buckling.

In certain circumstances, a strong reduction of cross-section of the transversal rebars may facilitate shear failure.

The present study aims at contributing to the assessment of existing reinforced concrete (RC) bridge piers under seismic loading, when affected by corrosion problems. A fiber beam element implemented in OpenSEES [11] is proposed as a numerical tool able to provide both computational efficiency and appropriate accuracy.

2 Numerical Investigations

The RC pier used for the present numerical investigation, even if not referring to any specific structure, is representative of many real bridge columns existing along Italian roads. It has been placed in Reggio Calabria (Italy), where expected PGA (peak ground acceleration) is 0.35 g.

The pier has a diameter of 2.5 m and a height of 7.0 m. The steel rebars have yield strength equal to 450 MPa and the ultimate strain for uncorroded rebars is assumed to be equal to 0.075.

Two longitudinal reinforcement configurations have been considered, as shown in Fig. 1 and Table 1 (marked as Type A and B); in all of them the concrete cover was assumed to be 50 mm measured from the external surface to the centroid of spiral reinforcement. The longitudinal reinforcement ratio ρl for the two reinforcement configurations is about $\rho l = 3.0\%$. The axial load ratio is $\nu = 15.0\%$ (P = 13936.7 kN).

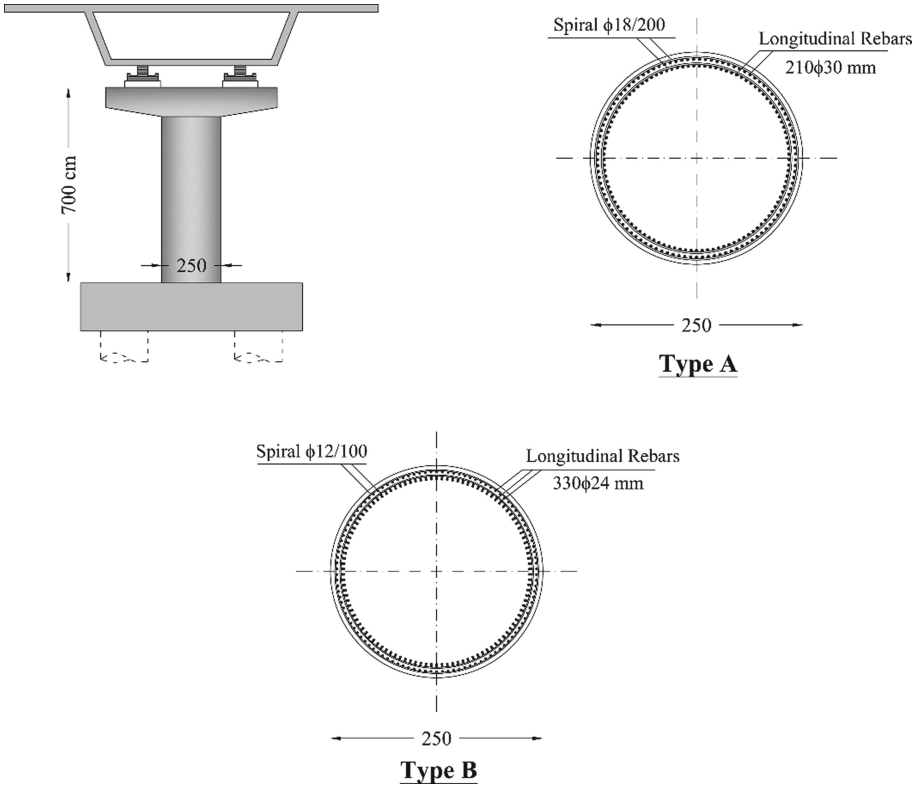

Fig. 1. RC pier bridge geometry and reinforcements: For description of reinforcement arrangements see Table 1.

Table 1. Pier Geometry and reinforcement arrangements.

Type	Longitudinal reinforcement	Transverse reinforcement
A	210ϕ30 – on 2 layers	2 ϕ18 mm spiral/200
B	330ϕ24 – on 3 layers (2nd and 3rd in adherence)	2 ϕ12 mm spiral/100

3 Numerical Model

The finite element model adopted in this research has been developed using the computation framework OpenSEES (Open System for Earthquake Engineering Simulation). The model, as schematically depicted in Fig. 2, has been developed according to Kashani et al. [8]: it is constituted by two nonlinear force-based beam-column elements, used to model the flexural response and a zero-length element used to model the bonding response.

The first element, in the proximity of the plastic hinge zone, has three Gauss-Lobatto integration points and its length is 6 times the longitudinal steel buckling length L_b (herein assumed equal to the spiral pitch). The second element has five integration points (Fig. 2a). The behavior of the beam-column is obtained through the integration of the responses obtained at the section level. The element cross-sections are discretized in fibres (Fig. 2b).

Since it is expected that bar buckling will occur on the first critical section of the column, the modified Monti and Nuti with corrosion stress-strain law (SteelMN implemented in OpenSEES by the authors), which is able to account for bar buckling, is employed to represent the response of the steel bars in the element 1. Instead, the constitutive model by Menegotto and Pinto (Steel02) is adopted for the bars in the 2nd element. Variations of steel bar mechanical proprieties due to corrosion are considered only for the outermost layer.

The corrosion level at different time of exposure is evaluated by a multiphysics approach as explained in [19, 21]. In Table 2 is reported the loss cross-section area for the considered cases. To account for the effect of strain concentration due to pitting corrosion which reduces the reinforcements ductility, the method proposed by Imperatore et al. [7] is employed. The greater slenderness ratio ($\lambda = L/D$, where L is the spiral pitch and D is the diameter of the longitudinal reinforcement) of the corroded longitudinal rebars under compression is accounted for as suggests in [3, 9, 14, 15, 27].

The concrete is modelled by the Concrete04 uniaxial material, the concrete on the section cover is considered unconfined, whilst the concrete in the section core is considered as confined, using the Mander et al. model [10, 20]. The effect of concrete cover cracking and spalling due to rust expansion is also taken into account reducing the strength of the cover concrete as suggest by Coronelli and Gamabrova [1], no variations

of mechanical proprieties of the confined concrete core are considered since internal spiral confinement is expected to be uncorroded.

Table 2. Pier geometry and reinforcement arrangements.

Case	Time [years]	Reinforcement area reduction A(t)/A0 [%]	
		Longitudinal reinf.	Transversal reinf.
A.0, B.0	0.00	100.0%	100.0%
A.68	68.0	89.3%	60.5%
B.68	68.0	81.5%	27.2%

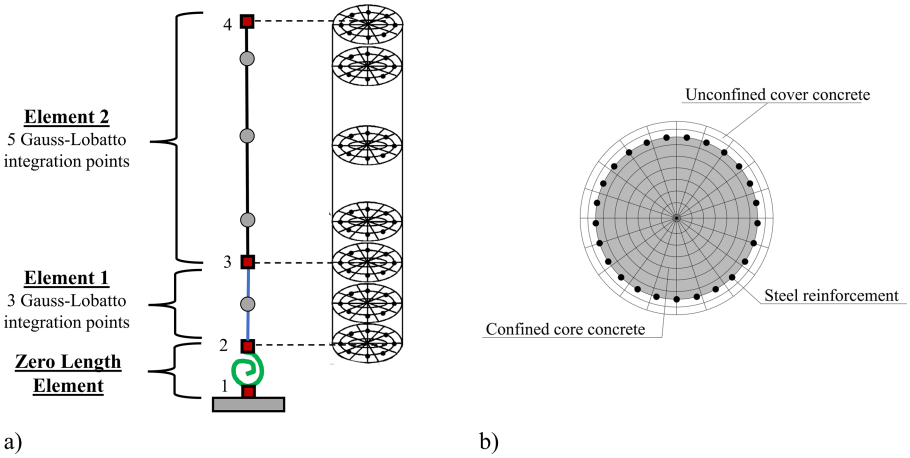

Fig. 2. Model implemented in OpenSEES: a) element configuration, b) fibre section.

The bonding is responsible for the extra displacement due to the slippage of the longitudinal reinforcing bars anchored in the concrete foundation. A linear moment-rotation relationship has been used for the rotational slip spring placed at the bottom of the column.

Table 2 reports a general overview of the numerical investigations considered in the present paper: the cases are designed by a two character designation, the first character (the letter A, B) specifies the section typology (as indicated in Table 1), the second one the time of exposure to the ageing agents (0 representing the uncorroded case). The cyclic history displacement applied to the top of the column is plotted in Fig. 3.

4 Results

In Fig. 4 the pier shear-drift behaviors for the uncorroded and corroded cases are compared. For Typer A (Fig. 4a) there are slight differences between the uncorroded and

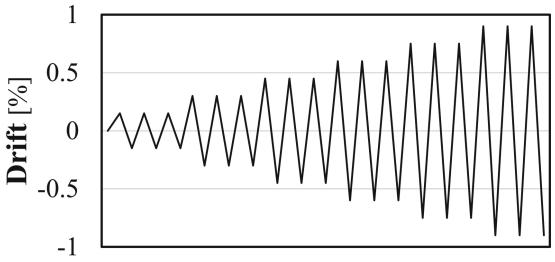

Fig. 3. Cyclic displacements applied to the fiber-element model.

corroded responses. This may be attributed to the modest loss cross-section area of the longitudinal reinforcement due to pitting corrosion. In fact, there is a loss of about 10% at 68 years of exposure in the external circumference while the internal remains uncorroded. Similar conclusions can be drawn for Type B (Fig. 4b), despite a greater loss cross-section area (about 20% at 68 years of exposure for the external layer) only one-third of longitudinal rebars are expected to be corroded.

It is important to underline that the external spiral reinforcements are heavily affected by larger corrosion with respect to longitudinal reinforcement. Therefore, the pier may undergo a shear failure in the elastic branch or immediately after the formation of the plastic hinge [18]. The FE model developed herein is not able to directly account for shear behavior. However, the shear strengths for the corroded pier evaluated with the model of Priestley [18] and with a truss model ($\theta = 45°$) are also reported in Fig. 4.

The latter model is quite conservative than the former one. It is evident that in Type B the failure may be in shear, while in Type A the shear strength is still higher than shear demand. This is due to the different transverse arrangements; the greater is the spiral reinforcement diameter (18 Vs 12), the lower is the damage due to corrosion.

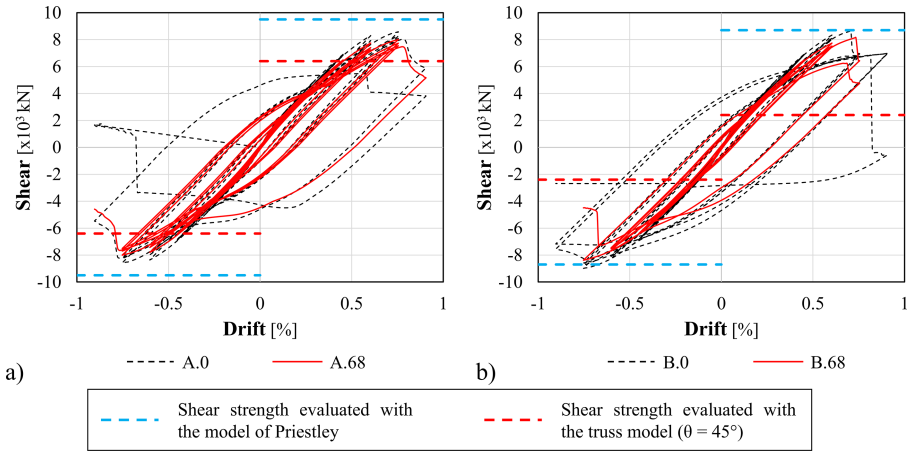

Fig. 4. Comparison between uncorroded and corroded behaviours. a) pier shear-drift responses for Type A, b) pier shear-drift responses for Type B. Shear strength is evaluated only for corroded cases.

5 Conclusions

The present paper aimed to investigate the effect of corrosion on different steel arrangement. The cases of bridge columns with code complying for design for corrosion are investigated at time 0 (zero) and after 68 years. The numerical model of the RC pier proposed needs of further validation against experimental data.

The time-dependent evolution of steel corrosion was evaluated by a Multiphysics approach which require a large computational effort, but some simplification can be introduced to reduce the elaboration time.

The following conclusions can be drawn:

- transversal reinforcement are more affected by corrosion than longitudinal ones due to minor concrete cover depth and a lower diameter. Moreover large longitudinal diameter adoption reduces the amount of corrosion;
- shear failure may arise in the steel arrangement B due to a smaller diameter of the transversal reinforcement than arrangement A;
- longitudinal reinforcement arranged on multi-layer may mitigate the effect of the steel corrosion.

References

1. CEB-FIB. Model Code 2010-Final Draft. The International Federation for Structural Concrete (FIB CEB-FIP), Lausanne, Switzerland (2010)
2. Decanini, L., De Sortis, A., Goretti, A., Langenbach, R., Mollaioli, F., Rasulo, A.: Performance of masonry buildings during the 2002 Molise, Italy, earthquake. Earthq. Spectra **20**(S1), 191–220 (2004)
3. Dhakal, R.P., Maekawa, K.: Modeling for postyield buckling of reinforcement. J. Struct. Eng. **128**(9), 1139–1147 (2002)
4. Eligehausen, R., Bertero, V.V., Popov, E.P.: Local bond stress-slip relationships of deformed bars under generalized excitations: Tests and analytical model. Report No EERC., pp. 83–23, Earthquake Engineering Research Center, University of California: Berkeley, CA, USA (1983)
5. Grande, E., Rasulo, A.: A simple approach for seismic retrofit of low-rise concentric X-braced steel frames. J. Constr. Steel Res. **107**, 162–172 (2015)
6. Grande, E., Rasulo, A.: Seismic assessment of concentric X-braced steel frames. Eng. Struct. **49**, 983–995 (2013)
7. Imperatore, S., Rinaldi, Z.: Experimental behavior and analytical modeling of corroded steel rebars under compression. Constr. Build. Mater. **226**, 126–138 (2019)
8. Kashani, M.M.: Size effect on inelastic buckling behavior of accelerated pitted corroded bars in porous media. J. Mater. Civ. Eng. **29**(7), 04017022 (2017)
9. Lavorato, D., et al.: A corrosion model for the interpretation of cyclic behavior of reinforced concrete sections. Struct. Concr. **21**(5), 1732–1746 (2020). https://doi.org/10.1002/suco.201900232
10. Mander, J.B., Priestley, M.J., Park, R.: Theoretical stress-strain model for confined concrete. J. Struct. Eng. **114**(8), 1804–1826 (1988)
11. McKenna, F., Fenves, G.L., Scott, M.H., Jeremic, B.: Open System for Earthquake Engineering Simulation (OpenSEES). University of California, Berkeley, CA, USA (2000)

12. Meda, A., Mostosi, S., Rinaldi, Z., Riva, P.: Experimental evaluation of the corrosion influence on the cyclic behaviour of RC columns. Eng. Struct. **76**, 112–123 (2014)
13. Menegotto, M., Pinto, P.E.: Method of analysis of cyclically loaded RC plane frames including changes in geometry and non-elastic behavior of elements under normal force and bending. International Association for Bridge and Structural Engineering, vol. 11, pp. 15–22 (1973)
14. Monti, G., Nuti, C.: Nonlinear cyclic behavior of reinforcing bars including buckling. J. Struct. Eng. **118**(12), 3268–3284 (1992)
15. Monti, G., Nuti, C.: Un modello analitico del comportamento ciclico di barre in acciaio con svergolamento post-elastico. Dipartimento di ingegneria strutturale e geotecnica, Università degli studi di Roma "La Sapienza", Report No. 6 (1991)
16. Nuti, C., Rasulo, A., Vanzi, I.: Seismic safety evaluation of electric power supply at urban level. Earthq. Eng. Struct. Dyn. **36**(2), 245–263 (2007)
17. Nuti, C., Rasulo, A., Vanzi, I.: Seismic safety of network structures and infrastructures. Struct. Infrastruct. Eng. Maintenance Manag. Life-Cycle **6**(1–2), 95–110 (2010)
18. Paulay, T., Priestley, M.N.: Seismic Design of Reinforced Concrete and Masonry Buildings, 1st edn. Wiley, Hoboken (1992)
19. Pelle, A., et al.: Time-dependent cyclic behavior of RC bridge columns under chlorides-induced corrosion and rebars buckling. submitted to Structural Concrete (2021)
20. Popovics, S.: A numerical approach to the complete stress-strain curve of concrete. Cem. Concr. Res. **3**(5), 583–599 (1973)
21. Quaranta, G., et al.: Multiphysics finite element analysis and capacity assessment of reinforced concrete bridge piers exposed to chlorides. In: Di Menegotto, P. (eds.) Proceedings of the Italian Concrete Days (ICD) 2020, Naples, 14–16 April 2021 (2021)
22. Rasulo, A., Testa, C., Borzi, B.: Seismic risk analysis at urban scale in Italy. In: Gervasi, O., et al. (eds.) ICCSA 2015. LNCS, vol. 9157, pp. 403–414. Springer, Cham (2015). https://doi.org/10.1007/978-3-319-21470-2_29
23. Rasulo, A., Fortuna, M.A., Borzi, B.: A seismic risk model for Italy. In: Gervasi, O., et al. (eds.) ICCSA 2016. LNCS, vol. 9788, pp. 198–213. Springer, Cham (2016). https://doi.org/10.1007/978-3-319-42111-7_16
24. Rasulo, A., Goretti, A., Nuti, C.: Performance of lifelines during the 2002 Molise, Italy, earthquake. Earthq. Spectra **20**(S1), 301–314 (2004)
25. Rasulo, A., Pelle, A., Lavorato, D., Fiorentino, G., Nuti, C., Briseghella, B.: Finite element analysis of reinforced concrete bridge piers including a flexure-shear interaction model. Appl. Sci. **10**(7), 2209 (2020). https://doi.org/10.3390/app10072209
26. Rasulo, A., Pelle, A., Lavorato, D., Fiorentino, G., Nuti, C., Briseghella, B.: Seismic assessment of reinforced concrete frames: influence of shear-flexure interaction and rebar corrosion. In: Gervasi, O., et al. (eds.) ICCSA 2020. LNCS, vol. 12252, pp. 463–478. Springer, Cham (2020). https://doi.org/10.1007/978-3-030-58811-3_34
27. Zhou, Z., Nuti, C., Lavorato, D.: Modeling of the mechanical behavior of stainless reinforcing steel. In: Proceedings of the 10th Fib International PhD Symposium in Civil Engineering, Québec, QC, Canada, pp. 21–23 (2014)