Spatial Modelling of Seablite Distribution

Thanapong Chaichana(✉) and Yasinee Chakrabandhu(✉)

College of Maritime Study and Management, Chiang Mai University, Samut Sakhon, Thailand
{thanapong.c,yasinee.c}@cmu.ac.th

Abstract. Foods demands are increasing today opposed to the change in environmental degradation. In this work, we studied new seablite distribution modelling. We aimed to identify substantial basic factors related to spatial distribution of seablites to make a meaningful explanation or accurate prediction in a coastal region of Samut Sakhon, Thailand. Virtual field survey and field survey data of physical geography were used to form a structure of spatial model and build a predictive model. We found that important underlying factors of spatial distribution of seablites were soil salinity, soil pH, soil moisture, air temperature, height above sea level, distance from seashore, and wind direction. Our predictive model improves understanding upon a distribution of seablites and environments. This preliminary work supported to simulate the environments to establish and thrive seablites for smart agriculture system.

Keywords: Digital agriculture · Parameter estimation · Prediction · Smart farming · Spatial distribution model

1 Introduction

Seablite, generally known as Annual Seablite or Suaeda maritima, originally found in coastline regions, for example, in Thailand, in Samut Sakhon province. Indigenous people, such as, in Australia, Canada, Thailand and the United States, used seablite as food sources [1–4]. One reason purposed by them, for instance, tribes, Mon people in Thailand used seablite as alternative vegetable to cook a main dish, instead of using vegetation came from highland areas. These days, seablite has been used to produce foods, cosmetics, and medicine [5–7], and has shown a great potential to enter the local grocery stores and supermarkets. Thus, seablite itself reveals economic plant capabilities, and abilities to farm it elsewhere. Now, computer simulation has become a useful tool for modeling many systems, such as, agriculture, medicine, physics, geography, and climatology [8–13]. Early physical geography research, Janet Franklin purposed the predictive vegetation mapping to predict the vegetation distribution through the landscape from mapped environment variables [14]. In 1995, Franklin's model revealed that climate is a key parameter to influence soil development, moisture regime, and temperature regime for potential natural vegetation. This model was determined by computerized techniques, and useful for environment planning and basic research upon the role of the biota to the application of the earth system science.

© Springer Nature Switzerland AG 2021
O. Gervasi et al. (Eds.): ICCSA 2021, LNCS 12950, pp. 639–647, 2021.
https://doi.org/10.1007/978-3-030-86960-1_47

In 2012, Jennifer A. Miller described the species distribution models to predict broad-scale of ecological patterns for characterizations of non-stationarity and auto-correlation data [15]. Miller found that species richness had connected with environment factors between climate and normalized difference vegetation index. Later, in 2015, Miller and Holloway investigated the species distribution models incorporated species' ability to access suitable habitat [16]. Movement ability was found that involved with landscape factors (e.g., barriers, disturbance, and patch configuration), migration rates or dispersal constraints [17], and demographic factors (e.g., age at maturity, fecundity, and mortality). In 2018, Kosanic et al. studied the changes in the geographical distribution of plant species impacted by climate change at South West Peninsula, England, the United Kingdom [18]. Ellenberg values and climate indicators were used as the markers to respond the changes of both environments and climates. Kosanic's study suggested that Ellenberg and climate indicator values can contribute directly to plan appropriate environmental strategies. In 2019, Lewis et al. investigated long-term implication of crop planning thru climate change [19]. Precipitation and temperature factors were predicted for the next five decades until 2071, based on optimization models for crop planning. Lewis's study recommended that the crop mixes will have to change due to climate change. Sustainable crop choices will change in the future, because of the large-scale irrigated agriculture may become unavailable. For these reasons, the spatial model of specific plant distribution in certain area will improve our knowledge on parameter estimation for plants framing, however, there were not yet studied on geographical distribution of seablite origin and its environmental factors. This paper developed model for seablite spatial distribution.

This paper is organized as follows. Section 2 describes the proposed method, especially present seablite data, environmental determinants, survey techniques, as well as spatial and predictive model. Section 3 illustrates quantitative quantity of seablite distribution. Section 4 discusses on how our finding will improve future farming. Finally, Sect. 5 concludes seablite distribution model and describes future research.

2 Methods

In this study, we first explored current seablite data across Samut Sakhon, Thailand. Then, virtual field survey and field survey have been conducted to investigate the key factors correlated to spatial distribution of seablites. Subsequently, structure of spatial model and predictive model were built. Environmental factors were determined using coastal environments. Finally, how to investigate the geographical distribution of seablite origin and its environmental factors are introduced.

2.1 Current Seablite Data

Current spatial records of seablite distribution in Samut Sakhon were obtained from the online "Food from Cha Khram (seablite) leaves" of the Samut Sakhon Provincial Cultural Office (SSPCO) [20]. The SSPCO data contains the distribution of seablite situated in a coastal region, characteristics of seablite's leaves, benefits of seablite for cooking food or main dishes, medicinal properties. The SSPCO data records were published on 21st June 2017 and have been accessed since July 2020.

2.2 Virtual Field Survey

Virtual field survey was conducted for three months from July to September 2020 in the following sub-districts of Mueang Samut Sakhon: Na Khok, Kalong, Bang Tho Rat, Ban Bo, Bang Ya Praek, Krok Krak, Khok Kram, and Panthai Norasing, which located in coastal regions started from the left-to-right, as shown in Fig. 1, respectively. We conducted a virtual field survey to identify the seablite sources using Google Maps, Google Earth, and GoodNotes software. Consequently, we spotted the locations of seablite origins as the red dots in digital illustrative maps.

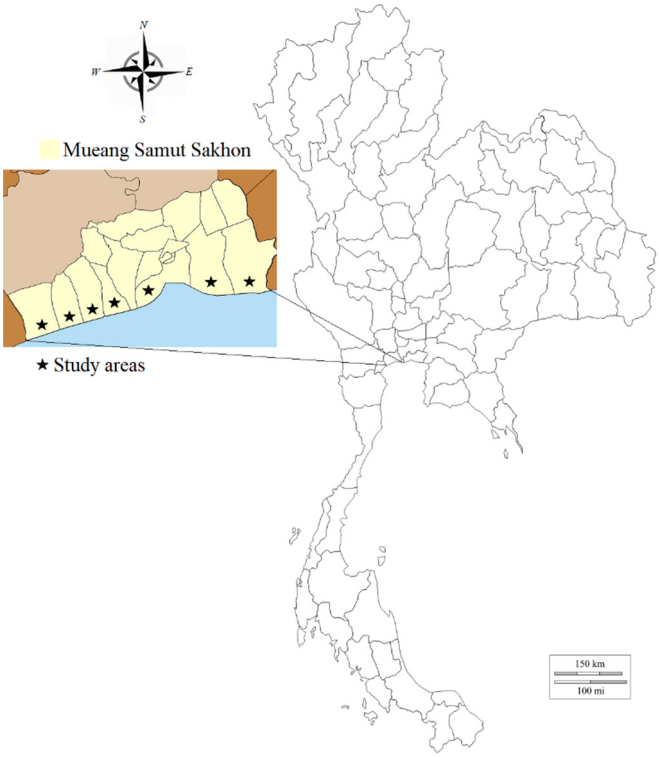

Fig. 1. Map of Thailand showing Mueang Samut Sakhon district.

2.3 Field Survey

Field survey was conducted in September 2020 for an arbitrarily verification of the results obtained from virtual field survey in the following subdistricts: Na Khok, Khok Kram, and Panthai Norasing. In addition, we conducted the second field survey in February 2021 through the study areas for quantification of spatial data of seablite origin including soil salinity, soil pH, soil moisture, air temperature, elevation, distance from seashore, wind direction, and height and width of seablite.

We then collected a sample pack of seablite for each subdistrict is around 100–200 g. Figure 2(a) revealed sample from Bang Ya Praek subdistrict. Hence, there were seven sample packs in total. Sodium chloride was extracted in grams per hundred grams of seablite in room temperature at chemical laboratory (Central Laboratory (Thailand) Co.,Ltd., Samut Sakhon, Thailand) with reference method is "AOAC (2019) 937.09" on 4th March 2021. Finally, sodium chloride was extracted from seablite to predict the condition of soil moisture, and soil salinity.

2.4 Structure of Spatial Model

The structure of spatial model of seablite was constructed from virtual field survey and field survey. Figure 2(b) reveals one spot of spatial model of seablite origin (e.g., at latitude x and longitude y-coordinate (13.49200, 100.16349) in geographic coordinate system.

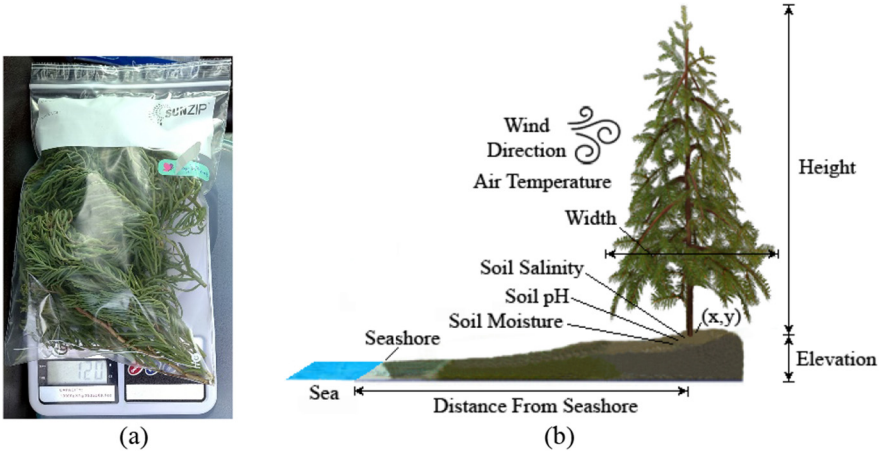

Fig. 2. 120 g of seablite sample (a), and geospatial data of one seablite origin (b).

2.5 Predictive Model

Predictive model was built from geospatial data in previous section. The modelling method was used Boolean Logic incorporated with environmental determinants (soil conditions, wind direction, and maritime climate), and direct gradients (salinity, pH, moisture, and temperature). Predictive model was successfully developed to predict seablite origin, as shown in Fig. 3.

In addition, climate has a direct impact upon soil developments and their environmental factors, clearly demonstrated by the relationship between geology and topology in Fig. 3. We purposed smart agriculture system mapping based on the predictive model. Figure 4 shows digital agriculture mapping for farming seablite with using Logic AND Gates, and digital circuit was designed using CircuitVerse.

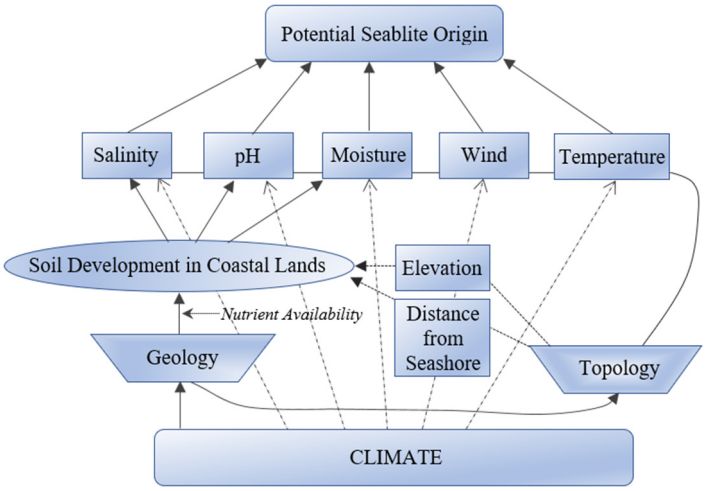

Fig. 3. Conceptual model.

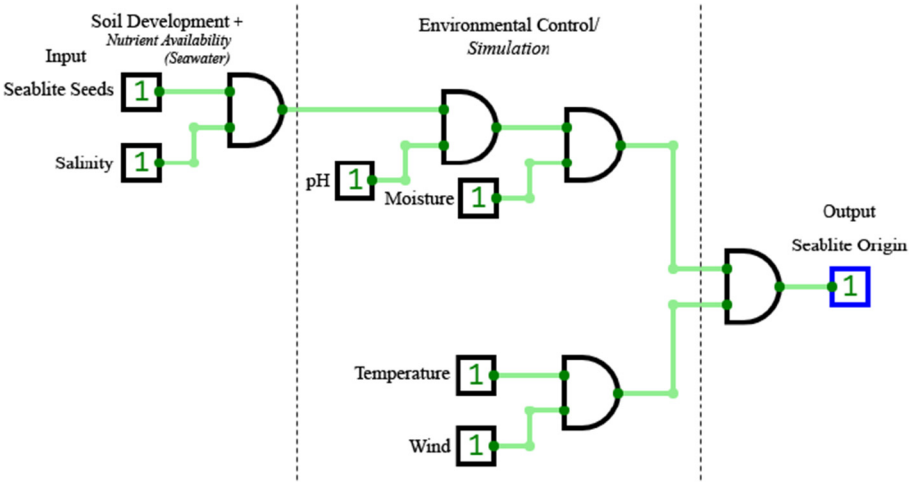

Fig. 4. Conceptual seablite smart farming model.

Seablite origin was predicted using the conceptual seablite smart farming model in Fig. 4. A binary digit was assigned, a value of bit '1' (succeed) and bit '0' (not succeed) was configurated as inputs of environmental determinants and direct gradients.

3 Results

3.1 Geographic Distribution of Seablite Origin

Geographic distribution of seablite origin in Mueang Samut Sakhon district has been analyzed using the spatial model structure and predictive model described in previous

sections. The computing machine for virtual field survey operated on Microsoft Windows 10, 64-bit system with 8 GB RAM, and Intel i3-10100F processor for 3.60 GHz CPU. The computation duration of seablite origins distributed along coastal regions in each subdistrict was estimated to be 4–5 days. Field survey mainly verified results achieved from virtual field survey. Table 1 demonstrates the number of seablite distribution retrieved from virtual field survey and field survey.

Table 1. Distribution of seablite origins in coastal lands

Mueang Samut Sakhon subdistricts	Seablite origins
Na Khok	490
Kalong	267
Bang Tho Rat	443
Ban Bo	1,365
Bang Ya Praek	104
Krok Krak	0
Khok Kram	701
Panthai Norasing	560

3.2 Prediction of Seablite Origin

Table 2 demonstrates the simulated 2-states of the outputs achieved from conceptual seablite smart farming model in Fig. 4.

Table 2. Seablite forecast

States	Seablite seeds	Salinity	pH	Moisture	Temperature	Wind	Seablite distribution
A	1	1	1	0	1	1	0
B	1	1	1	1	1	1	1

Bit '1' = succeed, and bit '0' = not succeed.

3.3 Virtual Field Survey and Field Survey

Figure 5 shows the geographical analysis of seablite origin of both virtual field survey and field survey. Figure 6 demonstrates an example of digital illustrative maps achieved from virtual field survey in Na Khok subdistrict. Thus, a total figure of 490 seablite origins has been quantified (see Table 1).



Fig. 5. Both spatial data of seablite origins. Red circle spotted matching the same pillar. These data were taken in Bang Tho Rat subdistrict at latitude and longitude (13.49200, 100.16349). (Color figure online)



Fig. 6. Seablite origins recorded as red dots. (Color figure online)

3.4 Analysis of Sodium Chloride Extracted from Seablite

Table 3 examined sodium chloride extracted from seablite samples in all study areas.

Table 3. Extraction of sodium chloride (NaCl) from seablite

Mueang Samut Sakhon subdistricts	NaCl (g/100 g)
Na Khok	3.97
Kalong	3.36
Bang Tho Rat	3.23
Ban Bo	3.69
Bang Ya Praek	4.37
Khok Kram	4.89
Panthai Norasing	4.01

4 Discussions

Human being centered activities mainly depend on agriculture to produce foods. The current climate change issues will impact agriculture to produce foods in the next five decades, and farming will have to change due to environmental change [19]. Studies of specific plant distribution will help to improve farming. Our work aimed to explain spatial model and its important factors to support smart farming. We modeled seablite distribution using virtual field survey. This is quick and efficient way to obtain the results. It reduced travel expenses, avoided the road accidents, and was given the same quality as the field survey conducted (see Fig. 5). Ban Bo subdistrict was found 1,365 seablite origins, whilst taking longest time for computation. In contrast, Krok Krak subdistrict was full housings led to unidentified seablite sources (see Table 1). We found that soil development contained salinity, pH, and moisture for seablite origin. These factors depended on climate. Thus, climate was a key controller for agriculture (see Fig. 3). Seablite sample collected from Khok Kram subdistrict (see Table 2) displayed a greatest quantity of NaCl (4.89 g). It proved that Khok Kram had a good condition of soil moisture, and soil salinity. Agricultural forecast of seablite was determined by our conceptual model (see Fig. 4). Output of seablite relied on environmental determinants and direct gradients. Nonetheless, sunlight was uncontrolled variable, and excluded in present study. This study has some limitations. It was mainly conducted using virtual field survey, however seablite outputs were verified by physical field survey, and study area was only in seashore regions.

5 Conclusions

This work conducted simulation of environmental determinants and direct gradients for seablite smart farming. Our results are preliminary intended to accurately describe the substantial basic factors related to seablite origins. All study areas had an average distance of 8.495 km from seashore, computed seablite origins spatially distributed in Mueang Samut Sakhon district. This finding reported sufficiently data and models to simulate key environmental factors for farming seablite. Our work helps to improve understanding on spatial data of seablite distribution in coastal areas. Further studies focusing on the development of seablite smart farming based on our primary results and spatial model of seablite distribution.

Acknowledgments. This research project is supported by TSRI.

References

1. Kuhnlein, H.V., Turner, N.: Traditional Plant Foods of Canadian Indigenous Peoples: Nutrition, Botany and Use. Routledge, London (2020). https://doi.org/10.4324/9781003054689
2. Chalmers, L.: Native vegetation of estuaries and saline waterways in south Western Australia. Water and Rivers Commission, Perth, Western Australia (1997)

3. Norton, S.: World's first indoor saltwater farm brings sea beans to Charleston menus. https://charlestonmag.com/features/the_worlds_first_indoor_saltwater_farm_brings_sea_beans_to_charleston_menus. Accessed 25 Mar 2021
4. Vorasiha, E.: The travelling route for gastronomic tourism via salt in western region of Thailand. Afr. J. Hospitality Tour. Leisure **7**(3), 1–9 (2018)
5. Jabiyeon Cream. http://www.saenggreen.com/eng/product/product010301.html. Accessed 14 Jan 2021
6. Harikrishnan, R., et al.: Effect of dietary supplementation with Suaeda maritima on blood physiology, innate immune response, and disease resistance in olive flounder against Miamiensis avidus. Exp. Parasitol. **131**(2), 195–203 (2011)
7. Song, J., Wang, B.: Using euhalophytes to understand salt tolerance and to develop saline agriculture: Suaeda salsa as a promising model. Ann. Bot. **115**(3), 541–553 (2015)
8. Chaichana, T., Sun, Z., Jewkes, J.: Computation of hemodynamics in the left coronary artery with variable angulations. J. Biomech. **44**(10), 1869–1878 (2011)
9. Chaichana, T., Wiriyasuttiwong, W., Reepolmaha, S., Pintavirooj, C., Sangworasil, M.: Extraction blood vessels from retinal fundus image based on fuzzy C-median clustering algorithm. In: 4th International Conference on Fuzzy Systems and Knowledge Discovery, pp. 144–148 (2007)
10. Sun, Z., Mwipatayi, B., Chaichana, T., Ng, C.: Hemodynamic effect of calcified plaque on blood flow in carotid artery disease: a preliminary study. In: 3rd International Conference on Bioinformatics and Biomedical Engineering, pp. 1–4 (2009)
11. Chaichana, T., Brennan, C.S., Osiriphun, S., Thongchai, P., Wangtueai, S.: Development of local food growth logistics and economics. AIMS Agric. Food **6**(2), 588–602 (2021)
12. Chaichana, T.: Renewable, sustainable and natural materials on food packaging: primary data for robotically detect packaging shape in logistics. J. Phys. Conf. Ser. **1681**(1), 012024 (2020)
13. Chaichana, T.: Analysis of computing progress in maritime studies. ACM International Conference Proceeding Series, pp. 150–154 (2019)
14. Franklin, J.: Predictive vegetation mapping: geographic modelling of biospatial patterns in relation to environmental gradients. Prog. Phys. Geogr. **19**(4), 474–449 (1995)
15. Miller, J.A.: Species distribution models: Spatial autocorrelation and non-stationarity. Prog. Phys. Geogr. **36**(5), 681–692 (2012)
16. Miller, J.A., Holloway, P.: Incorporating movement in species distribution models. Prog. Phys. Geogr. **39**(6), 837–849 (2015)
17. Vasudev, D., Fletcher, R.J., Goswami, V.R., Krishnadas, M.: From dispersal constraints to landscape connectivity: lessons from species distribution modeling. Ecography **38**, 967–978 (2015)
18. Kosanic, A., Anderson, K., Harrison, S., Turkington, T., Bennie, J.: Changes in the geographical distribution of plant species and climatic variables on the West Cornwall peninsula (South West UK). PLoS One **13**(2), e0191021 (2018)
19. Lewis, A., Randall, M., Elliott, S., Montgomery, J.: Long term implications of climate change on crop planning. In: Rodrigues, J.M.F., et al. (eds.) ICCS 2019. LNCS, vol. 11536, pp. 369–382. Springer, Cham (2019). https://doi.org/10.1007/978-3-030-22734-0_27
20. The Samut Sakhon Provincial Cultural Office (SSPCO): Food from Cha Khram leaves. https://www.m-culture.go.th/samutsakhon/ewt_news.php?nid=459&filename=index. Accessed 25 Mar 2021