

Turning Meshes into B-reps with T-splines

Luigi Barazzetti(✉)

ABC Department, Politecnico di Milano, via Ponzio 31, 20133 Milano, Italy
luigi.barazzetti@polimi.it

Abstract. This paper presents the first results of a semi-automatic procedure able to turn tetra-meshes into solid models using T-splines. The paper deals with free-form objects where manual modelling based on NURBS curves and surfaces is not a simple process or could result in approximate reconstructions with significant geometric simplification.

The proposed solution relies on a multi-step processing workflow with several conversions and metric accuracy evaluation after each step. First, a closed triangular mesh is turned into a quad mesh, which is also made lighter and cleaner without losing significant level of detail. The quad mesh is then converted into a surface based on T-splines, which are powerful tools to model organic shapes. The final step of the method is the conversion of the closed surface into a novel B-rep based on watertight NURBS surfaces.

Keywords: Accuracy · B-rep · Mesh · Point clouds · Quad-mesh · T-splines

1 Introduction

Boundary representation (B-rep) [1, 2] models are used in several applications such as manufacturing products, prototyping, numerical simulation, and applications in the medical or entertainment industries. B-rep models are composed of faces (i.e. surfaces all connected without gaps) and topological relationships that allow defining the boundary of the object.

B-rep models are common solutions for representing solid bodies composed of simple and more complex NURBS(non-uniform rational B-splines)-based models. Indeed, CSG (constructive solid geometry [3]) based on geometric primitives (cubes, cylinders, cones, etc.) processed with Boolean operations (union, difference, intersection) do not give a sufficient flexibility in modeling projects requiring advanced geometric shapes, especially when objects cannot be represented by single or a combination of multiple primitives processed using Boolean operations.

B-rep is therefore the current standard in several engineering applications that require numeric simulation. The opportunity to model complex surfaces with NURBS provides advanced modeling tools for more complex shapes [4, 5]. On the other hand, the flexibility of such modeling tools has limitations when irregular surfaces need to be reconstructed. Modeling tools based on NURBS surfaces are not the best solution to reconstruct free-form objects like toys, sculptures, jewels, sporting goods, etc. For instance, the famous Stanford bunny (Fig. 1, [6]) created via laser scanning technology and made available

© Springer Nature Switzerland AG 2021
O. Gervasi et al. (Eds.): ICCSA 2021, LNCS 12950, pp. 34–44, 2021.
https://doi.org/10.1007/978-3-030-86960-1_3

with a mesh form could be a rather complicated objects to model using manual modeling based on B-rep.

The aim of this paper is to present a workflow able to answer the following question: can we get a B-rep model of a complex free-form objects reconstructed using point clouds or meshes? The idea is shown in Fig. 1, where the B-rep model of the Stanford bunny (b) was generated with the proposed workflow.

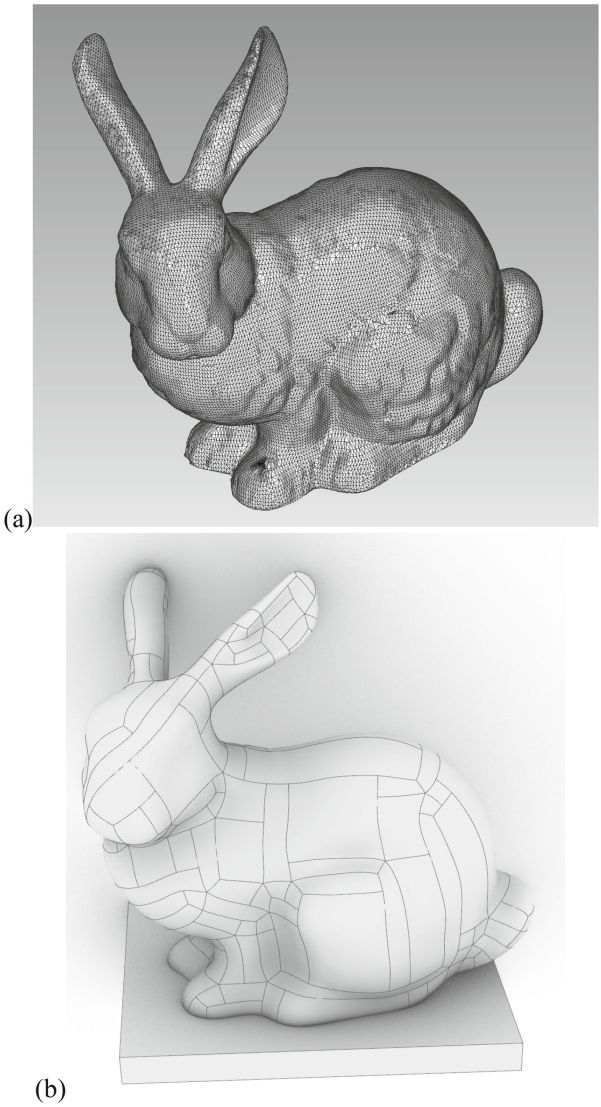

Fig. 1. (a) The original Stanford bunny as a tri-mesh, and (b) B-rep model generated using the initial mesh. The only part manually added was the rectangular base, whereas the conversion of the initial mesh into a solid B-rep model was fully automatic.

The model was generated using a semi-automatic approach that uses the available mesh of the bunny, which is converted into a B-rep model and saved using the STEP format [7]. Manual modeling is not necessary with the proposed workflow, that is based on a multi-step workflow in which the initial mesh is converted into a sequence a products, whose metric accuracy (i.e., the discrepancy between the original mesh and all the intermediate products generated during the conversion pipeline) is checked to verify the magnitude of the error. The only "manually modeled" element is the base of the bunny.

Automation in the conversion was possible thanks to the use T-splines [8, 9], which are better than NURBS to reconstruct the geometry of irregular shapes. T-splines are an extension of tensor-product NURBS and are defined on a control grid called T-mesh, which allows a row of control points to terminate, obtaining a T-junction.

2 Workflow for Automatic B-rep Model Generation

2.1 Mesh Pre-processing

The case study used in this paper is the well-known Stanford bunny, as mentioned in the previous section. The model is available on the internet on The Stanford 3D Scanning Repository (http://graphics.stanford.edu/data/3Dscanrep/). The mesh was generated using the technique described in [6] and has about 69,400 triangles with some holes in the bottom. The size of the model is about 0,15 m × 0,15 m × 0.11 m. The gravity direction is the y-axis (negative).

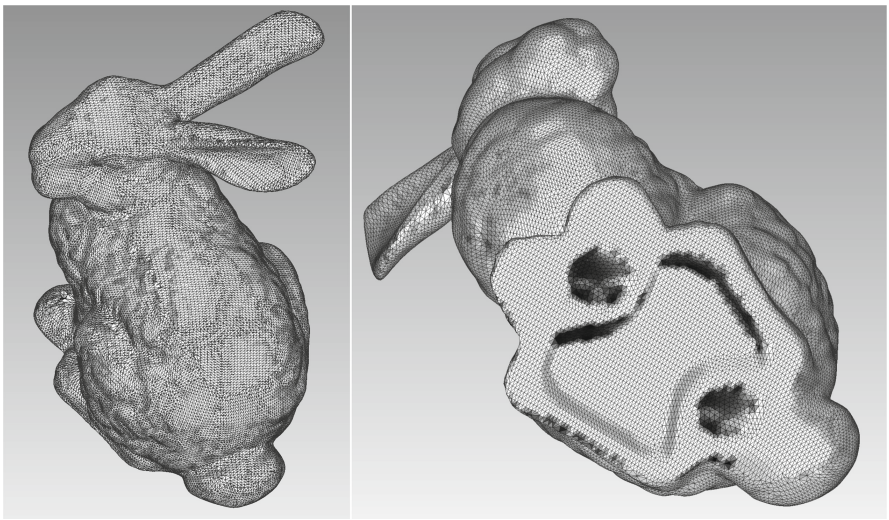

Fig. 2. The tri-mesh of the Stanford bunny after some editing: removal of holes and smooth filtering to reduce spikes.

One of the requirements to produce the model with the procedure proposed in this paper is the availability of a closed mesh. This means that holes must be removed. Other

important requirements consist of the absence of intersecting triangles and non-manifold edges. The mesh should also have a rather uniform size of triangles (although this is not always possible, e.g., for small parts), which could be obtained with remeshing techniques. The preliminary pre-processing consists of a set of (semi) automatic operations aimed at correcting such effects and can be done in different commercial software able to handle meshes generated from point clouds.

Some images of the mesh are shown in Fig. 2. Holes in the bottom part were fixed using Geomagic Wrap obtaining a total number of 70,458 triangles. A smoothing filter was also applied to reduce spikes, slightly changing the initial shape of the bunny. As the goal of the procedure described in this paper is a good geometric consistency between the final model and the original mesh, an accuracy analysis was carried out using mesh-to-mesh comparison algorithms. The discrepancy error was about 0.0001 m, which is about 0.04% in terms of relative error (i.e., compared to the diagonal of the model bounding box).

2.2 Tri- to Quad-Mesh Conversion

Most mesh-based models produced with photogrammetric or laser scanning point clouds are provided as triangular (tri-) meshes. The output of the previous phase (Sect. 2.1) is a tri-mesh formed by adjacent triangles and saved using the obj format. Such type of mesh is very popular in the field of reality-based modeling, where a set of 3 control points defines the basic triangle of the mesh. 3D applications with huge meshes (million triangles) are reported in technical literature because generation and processing of tri-meshes is easier than quadrilateral (quad-)meshes.

Quad meshes are mathematically more complex, notwithstanding they are easier to manipulate and have significant use in graphics applications [10]. The big advantage of a quad-meshes exploited in this work is their close relationship with T-meshes, and therefore a reconstruction based on T-splines. The initial conversion from the tri- to a novel quad-mesh is a quite common operations in different applications, and different procedures and algorithms were developed to automatically get lighter and more efficient representation without losing level of detail [11]. Two quad meshes of the bunny are shown in Fig. 3. They feature 1,105 (left) and 9,997 (right) faces, respectively. Both where created with Recap Photo. The possibility to work with a model with less faces is of primary interest in the proposed approach, so the "coarse" quad-mesh was compared to the original tri-mesh, obtaining a discrepancy of about 0.0005 m, which was considered sufficient. The complete error map is shown in Fig. 4.

The selection of the optimal number of faces in a project requires repeated conversions by changing the resolution and comparisons to check if sufficient metric accuracy of the quad-mesh has been achieved. It is not simple to define a priori the optimal number of faces because the intrinsic geometry of the considered object determines the result.

2.3 Generation of a Model Based on T-splines and B-rep Conversion

Quad-meshes are particularly suitable to generate a novel surface based on T-splines. The quad-mesh can be used as T-mesh, which is the control grid of a T-splines [12]. Such procedure consists in the production of a novel surface that can be interactively edited.

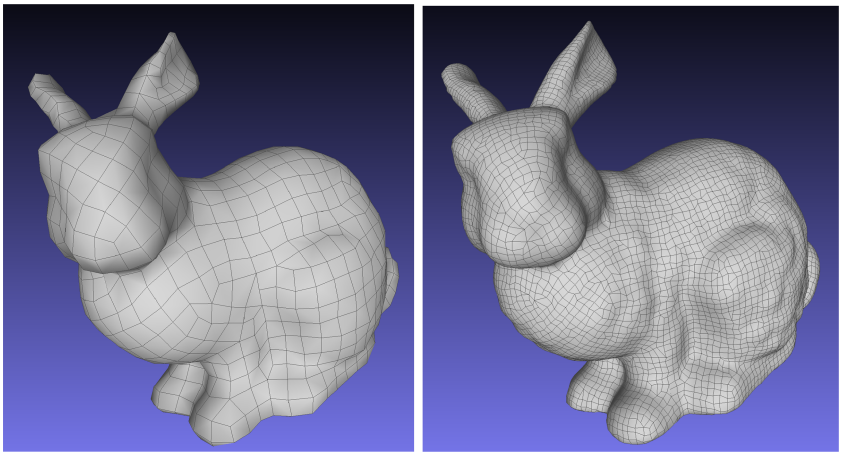

Fig. 3. Examples of quad-meshes with different number of faces generated from the tri-mesh. The solution on the left has 1105 faces and was chosen for further processing.

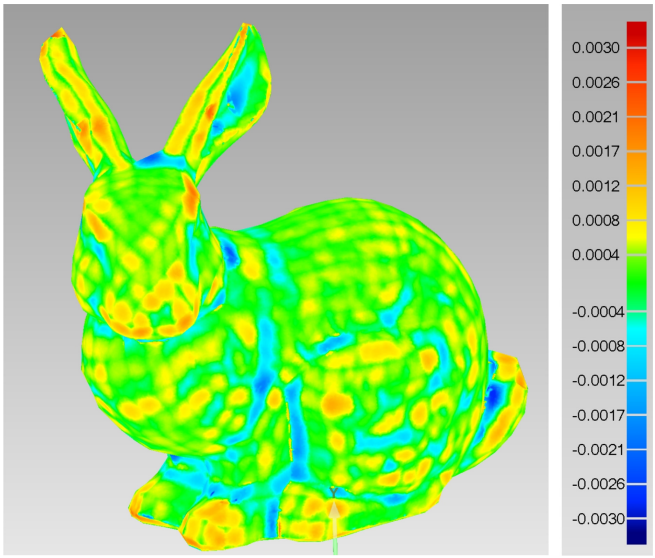

Fig. 4. Comparison between the quad-mesh with 1105 faces and the original tri-mesh available on the Stanford repository. The overall discrepancy is 0,0005 m.

The modeling approach is also very suitable for organic shapes, i.e., those irregular bodies in which direct modeling with NURBS could be rather difficult.

T-splines can be defined as NURBS with T-junctions. They allow a row of control points to terminate and offer a more flexible way for local refinements. T-splines significantly reduce the number of control points necessary to satisfy topological constraints in NURBS-based modeling, in which all points must lie in a rectangular grid.

T-splines have become popular with the development of the T-splines plugin for Rhino, which however is no longer supported by Autodesk. The workflow proposed in this paper was carried out with Autodesk Fusion 360, in which T-splines tools have been integrated.

The quad-mesh was imported and converted into a T-spline, as shown in Fig. 5 (left). The surface can now be manipulated with different editing tools that can work on points, edges, or faces. Figure 5 (right) shows an example of possible modifications, in which the head of the bunny has been rotated, and the ears are now lying down. Although such simple modifications are not necessary in this work, they prove the advantage of T-splines as sculpting tools.

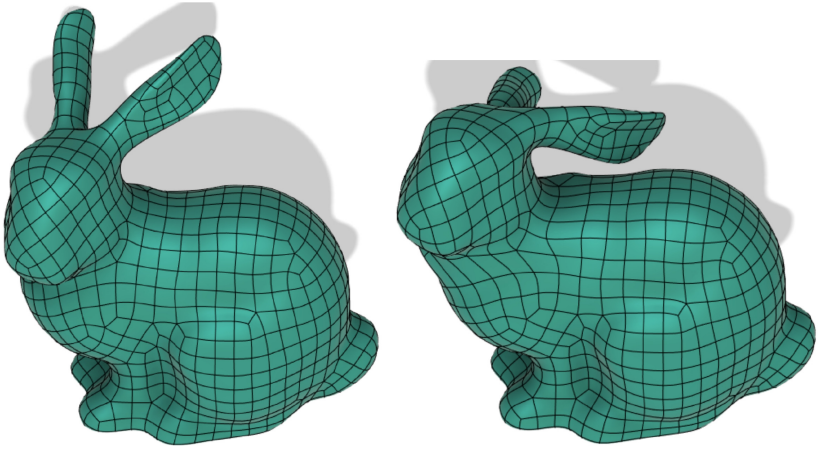

Fig. 5. The T-splines model from the quad-mesh (left), and an example of editing on the head of the bunny (right).

Finally, the T-splines can be converted into NURBS surfaces using knot insertion, and the method can provide a complete B-rep model if the initial surface is closed. The operation is still carried out in Fusion 360, and the obtained solid model was saved as STEP. Such operation provides the model shown in Fig. 6 (left).

The model is now a solid and Boolean operations are now possible, like in the case of Fig. 6 (right) where the difference with a sphere and a transversal cylinder was computed for the head and the body, respectively. A base was also added to the model. It was decided to add the base to show that Boolean operations are feasible. A comparison between the initial tri-mesh available in the Stanford repository and the B-rep model shows an overall discrepancy of 0,0007 m (Fig. 7).

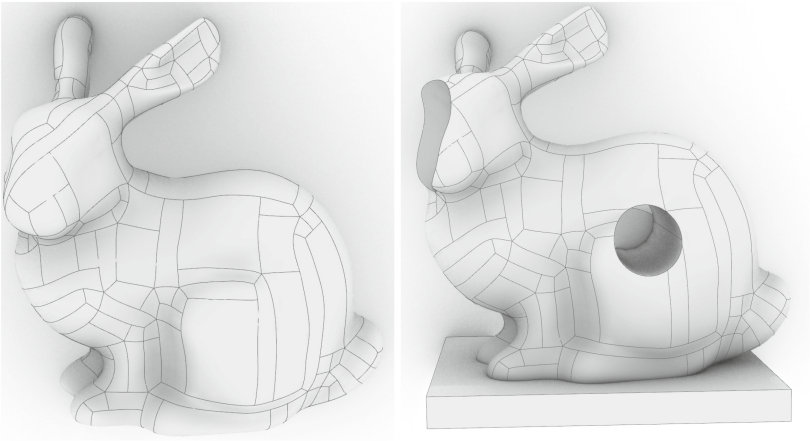

Fig. 6. The final B-rep model provided by the procedure described in the paper (left). The same model after some Boolean operations (right).

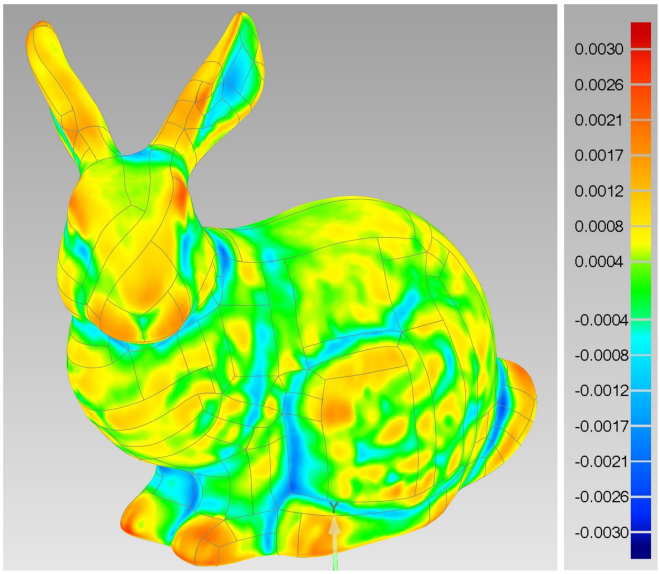

Fig. 7. Comparison between the final B-rep and the initial tri-mesh.

3 Testing the Influence of Multiple Model Conversions

The used workflow includes several conversions of the initial mesh into multiple products to generate a final B-rep model. A second test based on a relatively simple object is presented to check the influence of the different operations. The idea of this test is the comparison between results achieved with a body directly modeled using B-rep, and the same model initially converted into a closed tri-mesh. The workflow presented in the

previous sections should be able to provide a novel B-rep model, which can be compared to the initial one.

The solid model of a beam was generated by extruding a planar curve representing the transversal section (Fig. 8). The beam is $L = 3$ m long, whereas the section is visible in the figure and has overall dimensions of 1.2 m $\times$ 0.4 m. The edges where smoothed using circumferences of 0.1 m radius to simplify the generation of the quad-mesh. Although T-splines can also handle creased edges, the use of a smooth transition in the section was preferred.

The solid model was preliminary converted into a surface tri-mesh denser close to discontinuities.

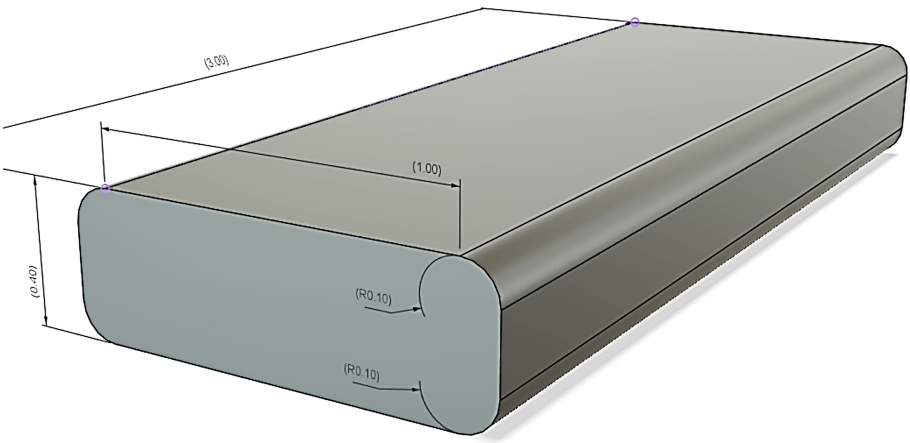

Fig. 8. The simulated beam and its dimensions in meters.

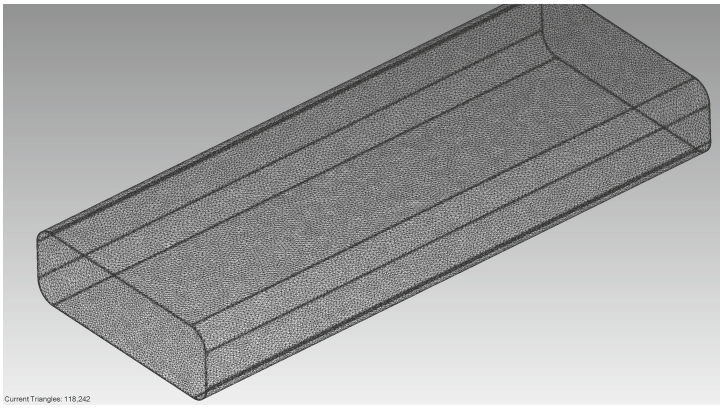

Fig. 9. The initial tri-mesh of the beam

The initial tri-mesh is shown in Fig. 9 and features more than 118,000 triangles. The model was converted into a quad-mesh using Instant Meshes, which is available for Windows, OS X, and Linux, and it can retopologize complex meshes.

The quad-mesh was then imported into Fusion 360 and converted into a T-spline surface. The result is the surface shown in Fig. 10. It features 6217 faces and is smoother, especially the transitions which were effective discontinuities in the initial model. The B-rep model appears as split into different surfaces. Indeed, such conditions are usually fixed working on edge or surfaces, which should follow the logic of construction of the element. This could be a less significant issue for free-form organic objects, in which most surfaces are irregular since the beginning. In the case of regular elements, the automatic generation of a B-rep model could result in a solid with overall good geometry, but the boundary could be made up of multiple surfaces with a quite irregular pattern (Fig. 11).

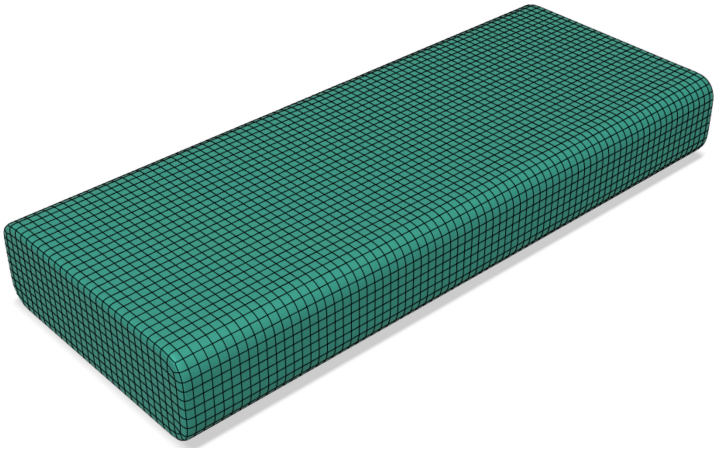

Fig. 10. The T-spline model of the beam created from a quad-mesh.

The overall discrepancy between the initial solid model and the final one reconstructed with the proposed solution is 0.0019 m. The error map is shown in Fig. 12, where errors are clearly more visible close to the traversal edges. Although the overall error is relatively good, the problem related to the irregular subdivision pattern obtained must be carefully considered. This will be done in future work.

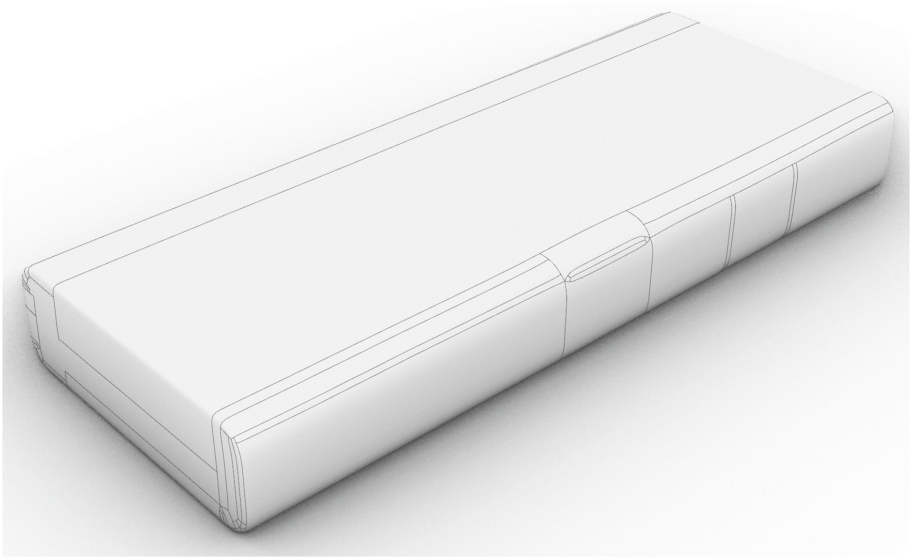

Fig. 11. The B-rep solid model obtained from the T-spline model.

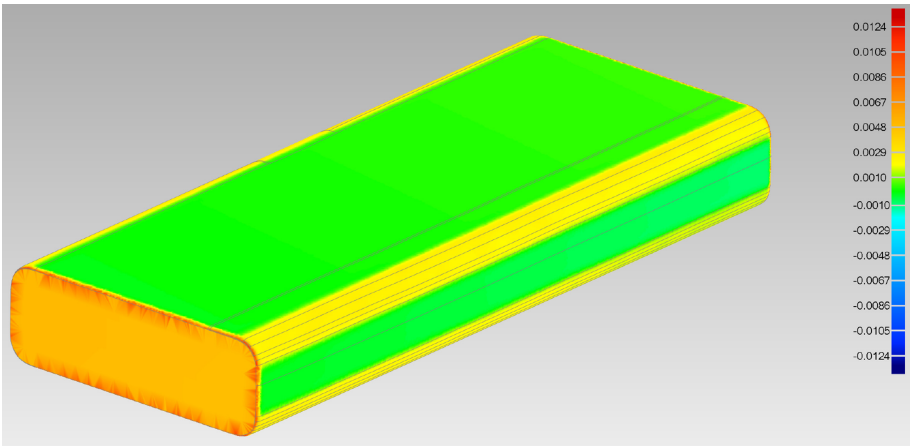

Fig. 12. Discrepancy (in meters) between the original solid model and the final B-rep solid model regenerated with the proposed workflow.

4 Conclusions

The paper presented the first results of a workflow for solid modeling of irregular bodies digitized with laser scanning. Starting from a tri-mesh of an object a B-rep model is created using consecutive conversions based on quad-meshes and T-splines, which are suitable functions for free-form objects.

Accuracy evaluation is carried out after each conversion to verify metric quality. The aim is to generate a B-rep model as similar as possible to the initial tri-mesh. Metric evaluation performed on a simple model of a beam have revealed good metric accuracy. The main limitation found is related to the connection of trimmed surfaces, which could follow a quite inhomogeneous pattern. Such result becomes evident when the object features discontinuities, which is not the considered target for such workflow. Indeed, results on the Stanford bunny provided a more regular pattern since the object itself cannot be decomposed into basic geometric shapes.

More experiments will be carried out in future work, using both models generated with photogrammetric and laser scanning point clouds. The method seems attractive not only for the generation of solids, but also 3D models made up of surfaces.

References

1. Stroud, I.: Boundary Representation Modelling Techniques, p. 808, Springer, London (2010). Softcover reprint of hardcover 1st edn. 2006
2. Kaufmann, M.: Geometric and Solid Modeling: An Introduction. Morgan Kaufmann Series in Computer Graphics and Geometric Modeling, p. 338 (1989). ISSN 1046-235X
3. Requicha, A.A.G.: Solid modeling: a 1988 update. In: Ravani, B. (ed.) CAD Based Programming Sensory Robots, pp. 3–22. Springer Verlag, New York (1988). https://doi.org/10.1007/978-3-642-83625-1_1
4. Piegl, L., Tiller, W.: The NURBS Book. Monographs in Visual Communication, p. 646 Springer, Berlin (1995). ISBN 978-3-642-97385-7
5. Piegl, L., Tiller, W.: Computing offsets of NURBS curves and surfaces. Comput. Aided Des. **31**, 147–156 (1999)
6. Turk, G., Levoy, M.: Zippered polygon meshes from range images. Siggraph **94**, 311–318 (1994)
7. ISO 10303-21:2016. Industrial automation systems and integration – Product data representation and exchange – Part 21: Implementation methods: clear text encoding of the exchange structure
8. Sederberg, T.W., Zheng, J., Bakenov, A., Nasri, A.: T-splines and T-NURCCS. ACM Trans. Graph. **22**(3), 477–484 (2003)
9. Scott, M.A., et al.: Isogeometric boundary element analysis using unstructured T-splines. Comput. Methods Appl. Mech. Eng. **254**, 197–221 (2013)
10. Bommes, D., et al.: Quad-mesh generation and processing: a survey. Comput. Graph. Forum **32**(6), 26 (2013)
11. Jakob, W., Tarini, M., Panozzo, D., Sorkine-Hornung, O.: Instant field-aligned meshes. In: ACM SIGGRAPH ASIA 2015, p. 15 (2015)
12. Wang, W., Zhang, Y., Scott, M.A., Hughes, T.J.R.: Converting an unstructured quadrilateral mesh to a standard T-spline Surface. ICES REPORT 10–50, p. 23. The Institute for Computational Engineering and Sciences (2010)