

Application of Mathematical Models to Estimate the Water Level Stability in a Two-Tank System in Series with Service Demand Variations

Nilthon Arce[1], José Piedra[1], Eder Escobar[2], Edwar Lujan[3], Luis Aguilar[2], and Flabio Gutierrez[2(✉)]

[1] Universidad Nacional de Jaen, Jr. Cuzco N° 250, Pueblo Libre, Jaén, Cajamarca, Peru
{nilthon_arce,jpiedrat}@unj.edu.pe
[2] Universidad Nacional de Piura, Urb. Miraflores s/n, Castilla, Piura, Peru
{eescobarg,laguilari,flabio}@unp.edu.pe
[3] Universidad Católica de Trujillo, Panamericana Norte Km. 555, Moche, Trujillo, La Libertad, Peru
elujan@uct.edu.pe

Abstract. In this research work, a two-tank system in series was developed. In this system, water flows from the first tank to the second. Opening variations were present in the inlet valve, while the opening flow was fixed in the outlet valve. Using differential equations, the Jacobian matrix and eigenvalues, it was possible to analyze the stability of the system and obtain the equilibrium points. To estimate the adequate water levels, a linear and nonlinear model were implemented. Both models were able to estimate in real time the tanks water levels, identifying the system equilibrium points, this ensured the service demand. A simulation process was applied to evaluate the model's behavior over time. This simulation was performed using the Simulink tool of Matlab. Both linear and nonlinear models obtained similar results. Results analysis suggested the use of the linear model to implement the control system, since its transfer functions compositions are less complex and more efficient to deploy.

Keywords: Couple tank system · Equilibrium points · Stability · Control systems

1 Introduction

An interconnected tank system is composed by various inlets and outlets, where a required liquid level must be controlled at all time. These systems are used in a wide range of industries such as: food and beverage processing, power plants, pharmaceuticals, water treatment, cement and concrete processing, petrochemical, paper mills, among others.

© Springer Nature Switzerland AG 2021
O. Gervasi et al. (Eds.): ICCSA 2021, LNCS 12949, pp. 479–492, 2021.
https://doi.org/10.1007/978-3-030-86653-2_35

Tank systems are also used to experiment with: new controllers used to determine the tank levels [1–3], tank shape design [4–6]; systems robustness against failures or parameter alterations [7–9]; fuzzy controllers which simulate tanks handling by humans or under unknow models [10–12]; teaching tools for control systems [13, 14].

During modelling the physical system through differential equations, it is necessary to perform a stability analysis, which is plotted on the phase plane, where regions or stability points in the system are shown alongside with the direction from which stability is achieved. In the case of a tanks system, it is very important to determine the moment in which the system is stabilized by changes in the opening valves, which can be triggered by system request or failures present in the supply liquid.

In this research work, a two tanks system in series is studied. Water levels in the tanks are controlled by two valves (inlet and outlet), where the flow opening constitutes the system input variables. Openings states are represented accordingly with zero and one when totally close or open. Water levels in tanks represent the system output variables, meaning a solution must be obtained for a real problem represented by multiple inputs and outputs (MIMO).

Regarding the two-tank system, the Lyapunov method is used in [15] to perform the system stability analysis, however model simulation was not implemented. In [16] authors shown in an interactive fashion the water level control in two tanks. Model linearization and simulation were performed using the Taylor series and LabVIEW software respectively. Results were only shown for liquid control for a single variation in the inlet valve. In [17] a system of two nonlinear differential equations, which were solved through a numeric method were obtained. However, equilibrium points in the system nor the detailed data results were found.

In this research work, the system is composed by two tanks in series. These tanks are operated by valves, where water flows from the first tank to second. Opening variations are perform in the inlet valve, while maintaining a fix opening in the outlet one. A pair of two mathematical models are applied to estimate the water level. These are nonlinear and linear models, where the former is represented by ordinal differential equations, whereas the second by transfer functions. In order to ensure the demand of service, a stability analysis is performed over the hyperbolic points of the system. Finally, a simulation using the Simulink tool of Matlab is performed to observe the model's behaviors according with time.

2 Preliminaries

2.1 Single Tank Model

Using the Bernoulli equation [18], the outlet fluid velocity value of a tank is given by:

$$v = 2gh \tag{1}$$

Where h: water level height, g: gravity acceleration.

Considering that the inlet flow Q_e is proportional to the inlet valve opening V_e, the following is obtained:

$$Q_e = k_1 a_1 \tag{2}$$

Where k_1 is constant, a_1 represents the opening in the inlet valve V_e.

To compute the outlet flow Q_s a linear approximation between Q_s and the opening in the outlet valve V_s is perform, obtaining:

$$Q_s = k_2 a_2 \sqrt{2gh} = k_2 \sqrt{2g} a_2 \sqrt{h} = k a_2 \sqrt{h} \tag{3}$$

Where k is constant, a_2 represents the opening in the outlet valve V_s.

The outlet flow is given by the product between the fluid velocity and transversal area through for which circulates, such that:

$$Q = Av = A\sqrt{2gh} = A\sqrt{2g}\sqrt{h} = k\sqrt{h} \tag{4}$$

The accumulated liquid inside is the result of the difference between the inlet and outlet flow of the tank. Then, the following equation must be satisfied:

$$A\frac{dh}{dt} = Q_e - Q_s \tag{5}$$

This implies that water level variations in the tank base area over time are defined as the difference between inlet and outlet flow Q_e and Q_s respectively.

3 Problem Formulation

The introduction section described a wide range of problems involving tank systems. As observed, for such systems, in order to achieve stability and maintain the liquid service demand, it is necessary to perform opening variations in the inlet valve, while maintaining a fix opening in the outlet valve.

Figure 1, describes a two-tank system in series which are operated by valves. The opening percentages in the inlet and outlet valves V_e and V_s are controlled by α and β respectively. Liquid levels in tanks 1 and 2 are represented by H and h respectively. Also, tanks 1 and 2 base areas are defined by A_1 and A_2.

In the setting described before, a stable equilibrium point must be obtained. This must be achieved with opening variations in the inlet valve V_e while a fix opening is maintained in the outlet valve V_s. Finding the stable equilibrium points will allow us to stabilize the system. Then the adequate liquid levels H and h of tanks 1 and 2 will be known.

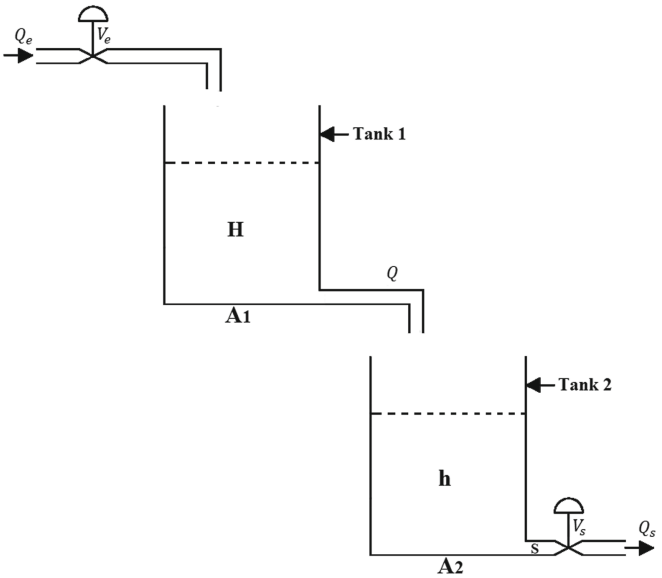

Fig. 1. A two-tank series system operated by valves.

4 Nonlinear Model

Applying Eqs. (2), (3), (4) y (5) in the system described in Fig. 1, a differential equation for the nonlinear model of tank 1 is obtained.

$$A_1 \frac{dH}{dt} = Q_e - Q = k'\alpha - k\sqrt{H} \tag{6}$$

For tank 2, a differential equation for the nonlinear model is also found

$$A_2 \frac{dh}{dt} = Q - Q_s = k\sqrt{H} - k''\beta\sqrt{h} \tag{7}$$

Then, the proposed nonlinear model for the system is:

$$\frac{dH}{dt} = \frac{1}{A_1}[k^{'}\alpha - k\sqrt{H}] \tag{8}$$

$$\frac{dh}{dt} = \frac{1}{A_2}[k\sqrt{H} - k''\beta\sqrt{h}]$$

Where k, k' y k'' are constants.

5 Linear Model

Modelling is applied to the case of a variable (α) opening flow in the inlet valve while a constant (β) opening flow is maintained in the outlet valve.

5.1 Linear Model for Tank 1

Using the three first terms from the Taylor series expansion [19], the nonlinear model of tank 1 is linearized, then:

$$f(\alpha, H) = A_1 \frac{dH}{dt} = k'\alpha - k\sqrt{H} \tag{9}$$

$$f(\alpha, H) \approx f\left(\overline{\alpha}, \overline{H}\right) + \frac{df}{d\alpha}\left(\overline{\alpha}, \overline{H}\right)(\alpha - \overline{\alpha}) + \frac{df}{dH}\left(\overline{\alpha}, \overline{H}\right)\left(H - \overline{H}\right) \tag{10}$$

The derivative and substitution in Eqs. (9) and (10) allow us to obtain:

$$f(\alpha, H) \approx f\left(\overline{\alpha}, \overline{H}\right) + k'(\alpha - \overline{\alpha}) - \frac{k}{2\sqrt{\overline{H}}}\left(H - \overline{H}\right) \tag{11}$$

$$f(\alpha, H) - f\left(\overline{\alpha}, \overline{H}\right) \approx k'(\alpha - \overline{\alpha}) - \frac{k}{2\sqrt{\overline{H}}}\left(H - \overline{H}\right) \tag{12}$$

$$f(\Delta\alpha, \Delta H) \approx k'\Delta\alpha - \frac{k}{2\sqrt{\overline{H}}}\Delta H \tag{13}$$

$$A_1 \frac{d\,\Delta H}{dt} \approx k'\Delta\alpha - \frac{k}{2\sqrt{\overline{H}}}\Delta H \tag{14}$$

Then, applying the Laplace transformation over Eq. (14) the transfer function, which represents the linear model of tank 1 is obtained:

$$\frac{H(s)}{\alpha(s)} = \frac{k'}{A_1 s + \frac{k}{2\sqrt{\overline{H}}}} = F(s) \tag{15}$$

5.2 Linear Model for Tank 2

Analogously, we use the Taylor series to linearize the nonlinear model from tank 2.

$$f(H, h) = A_2 \frac{dh}{dt} = k\sqrt{H} - k''\beta\sqrt{h} \tag{16}$$

$$f(H, h) \approx f\left(\overline{H}, \overline{h}\right) + \frac{df}{dH}\left(\overline{H}, \overline{h}\right)\left(H - \overline{H}\right) + \frac{df}{dh}\left(\overline{H}, \overline{h}\right)\left(h - \overline{h}\right) \tag{17}$$

Applying the derivative and substitution in Eqs. (16) and (17) allow us to obtain:

$$f(H,h) \approx f\left(\overline{H},\overline{h}\right) + \frac{k}{2\sqrt{\overline{H}}}\left(H-\overline{H}\right) - \frac{k''\beta}{2\sqrt{\overline{h}}}\left(h-\overline{h}\right) \tag{18}$$

$$f(H,h) - f\left(\overline{H},\overline{h}\right) \approx \frac{k}{2\sqrt{\overline{H}}}\left(H-\overline{H}\right) - \frac{k''\beta}{2\sqrt{\overline{h}}}\left(h-\overline{h}\right) \tag{19}$$

$$f(\Delta H,\Delta h) \approx \frac{k}{2\sqrt{\overline{H}}}\Delta H - \frac{k''\beta}{2\sqrt{\overline{h}}}\Delta h \tag{20}$$

$$A_2\frac{d\,\Delta h}{dt} \approx \frac{k}{2\sqrt{\overline{H}}}\Delta H - \frac{k''\beta}{2\sqrt{\overline{h}}}\Delta h \tag{21}$$

Applying the Laplace transformation over Eq. (21), the transfer function, which represents the linear model of tank 2 is obtained:

$$\frac{h(s)}{H(s)} = \frac{\frac{k}{2\sqrt{\overline{H}}}}{A_2 s + \frac{k''\beta}{2\sqrt{\overline{h}}}} \tag{22}$$

$$h(s) = \frac{\frac{k}{2\sqrt{\overline{H}}}}{A_2 s + \frac{k''\beta}{2\sqrt{\overline{h}}}} H(s) \tag{23}$$

$$h(s) = \left[\frac{\frac{k}{2\sqrt{\overline{H}}}}{A_2 s + \frac{k''\beta}{2\sqrt{\overline{h}}}}\right]\left[\frac{k'}{A_1 s + \frac{k}{2\sqrt{\overline{H}}}}\alpha(s)\right] \tag{24}$$

$$\frac{h(s)}{\alpha(s)} = \left[\frac{\frac{k}{2\sqrt{\overline{H}}}}{A_2 s + \frac{k''\beta}{2\sqrt{\overline{h}}}}\right]\left[\frac{k'}{A_1 s + \frac{k}{2\sqrt{\overline{H}}}}\right] = \frac{\frac{k'k}{2\sqrt{\overline{H}}}}{\left(A_1 s + \frac{k}{2\sqrt{\overline{H}}}\right)\left(A_2 s + \frac{k''\beta}{2\sqrt{\overline{h}}}\right)} = G(s) \tag{25}$$

Then, the transfer functions of the linear model in the system are defined by:

$$\frac{H(s)}{\alpha(s)} = \frac{k'}{A_1 s + \frac{k}{2\sqrt{\overline{H}}}} = F(s) \tag{26}$$

$$\frac{h(s)}{\alpha(s)} = \frac{\frac{k'k}{2\sqrt{\overline{H}}}}{\left(A_1 s + \frac{k}{2\sqrt{\overline{H}}}\right)\left(A_2 s + \frac{k''\beta}{2\sqrt{\overline{h}}}\right)} = G(s)$$

6 Stability Analysis of the Two-Tanks System

6.1 Equilibrium Points Estimation

Estimation of the equilibrium points is performed from the vectorial fields of the equations which govern the flow dynamics in tanks. These equations ensures that the inlet and outlet flow be the same for any tank. In this way, equilibrium is achieved in the tank height level.

For tank 1, the equality $Q_e = Q$ in Eq. (6) indicates the equilibrium point, such that:

$$\frac{dH}{dt} = \frac{1}{A_1}[k^{'}\alpha - k\sqrt{H}] = 0 \tag{27}$$

Obtained H as:

$$\overline{H} = \left(\frac{k'\alpha}{k}\right)^2 \tag{28}$$

Then, the equilibrium state of the water level in tank 1 is given by $\overline{H}$.

Analogously, in Eq. (7), $Q = Q_s$ indicates the equilibrium point for tank 2, such that:

$$\frac{dh}{dt} = \frac{1}{A_2}\left[k\sqrt{H} - k''\beta\sqrt{h}\right] = 0 \tag{29}$$

From Eqs. (28) and (29) the following is obtained:

$$\overline{h} = \left(\frac{k'\alpha}{k''\beta}\right)^2 \tag{30}$$

Where $\overline{h}$ represents the equilibrium state of the water level in tank 2.

Then, the system equilibrium point is defined by:

$$P(\overline{H}, \overline{h}) = \left(\left(\frac{k'\alpha}{k}\right)^2, \left(\frac{k'\alpha}{k''\beta}\right)^2\right) \tag{31}$$

6.2 Jacobian Matrix and Eigenvalues Estimation

From the differential equations system in (8), the Jacobian Matrix evaluated on the correspondent equilibrium point is defined as:

$$J(H, h) = \begin{bmatrix} \frac{\partial F}{\partial H} & \frac{\partial F}{\partial h} \\ \frac{\partial G}{\partial H} & \frac{\partial G}{\partial h} \end{bmatrix} = \begin{bmatrix} -\frac{k}{2A_1\sqrt{H}} & 0 \\ \frac{k}{2A_2\sqrt{H}} & -\frac{k''\beta}{2A_2\sqrt{h}} \end{bmatrix} \tag{32}$$

To estimate the eigenvalues, the following is applied:

$$\left|J\left(\overline{H},\overline{h}\right)-\lambda I\right|=\begin{vmatrix}-\frac{k}{2A_1\sqrt{\overline{H}}}-\lambda & 0\\ \frac{k}{2A_2\sqrt{\overline{H}}} & -\frac{k''\beta}{2A_2\sqrt{\overline{h}}}-\lambda\end{vmatrix}=0 \tag{33}$$

From Eq. (33) the following is obtained:

$$4A_1A_2\sqrt{\overline{H}\overline{h}}\lambda^2+2\left(kA_2\sqrt{\overline{h}}+k''\beta A_1\sqrt{\overline{H}}\right)\lambda+kk''\beta=0 \tag{34}$$

Let:

$$n_1=4A_1A_2\sqrt{\overline{H}\overline{h}} \tag{35}$$

$$n_2=2\left(kA_2\sqrt{\overline{h}}+k''\beta A_1\sqrt{\overline{H}}\right) \tag{36}$$

$$n_3=kk''\beta \tag{37}$$

Replacing Eqs. (35), (36) and (37) in Eq. (34) allow us to define:

$$n_1\lambda^2+n_2\lambda+n_3=0 \tag{38}$$

The roots from Eq. (38) are used to build the eigenvalues:

$$\lambda_{1,2}=\frac{-n_2\pm\sqrt{n_2^2-4n_1n_3}}{2n_1} \tag{39}$$

6.3 Stability in Equilibrium Points

The system stability for a certain equilibrium point is defined with the following conditions:

- If $\lambda_1<0\,and\,\lambda_2<0$, then the equilibrium point is stable
- If $\lambda_1<0\wedge\lambda_2<0$,, then the equilibrium point is unstable (saddle point)
- If $\lambda_1>0\wedge\lambda_2>0$, then the equilibrium point is unstable

7 Equilibrium Points Estimation for a Study Case

For the study case the following parameters are considered:

$k'=0.04\,\mathrm{m}^3/\mathrm{s}$ (V_e constant), $k=0.03\,\mathrm{m}^3/\mathrm{s}$, $k''=0.055\,\mathrm{m}^3$ (V_s constant), $\alpha=0.9$ (V_e opening), $\beta=0.6$ (V_s opening), $A_1=1\,\mathrm{m}^2$ (tank 1 base area), $A_2=1.5\,\mathrm{m}^2$ (tank 2 base area).

During experiments, opening variations in the inlet valve V_e are made accordingly with three values:

$$\alpha=\{90\%,85\%,89\%\}$$

While the opening percentage in the outlet valve V_s is set constant with $\beta=60\%$.

From Eq. (31) the equilibrium state for the tanks water levels is defined as:

a) For $\alpha = 90\%$, $\beta = 60\%$, the system equilibrium point $P_1\left(\overline{H}, \overline{h}\right) = (1.44\,\text{m}, 1.1901\,\text{m})$ is obtained. The eigenvalues $\lambda_1 = -0.0101$, $\lambda_2 = -0.0125$ are negatives, indicating stability in the equilibrium point.

b) For $\alpha = 85\%$, $\beta = 60\%$, the system equilibrium point $P_2\left(\overline{H}, \overline{h}\right) = (1.284\,\text{m}, 1.062\,\text{m})$ is obtained. The eigenvalues $\lambda_1 = -0.0107$, $\lambda_2 = -0.0132$ are negatives, indicating stability in the equilibrium point.

c) For $\alpha = 89\%$, $\beta = 60\%$, the system equilibrium point $P_3\left(\overline{H}, \overline{h}\right) = (1.408\,\text{m}, 1.164\,\text{m})$ is obtained. The eigenvalues $\lambda_1 = -0.0102$, $\lambda_2 = -0.0126$ are also negatives, confirming stability in the equilibrium point.

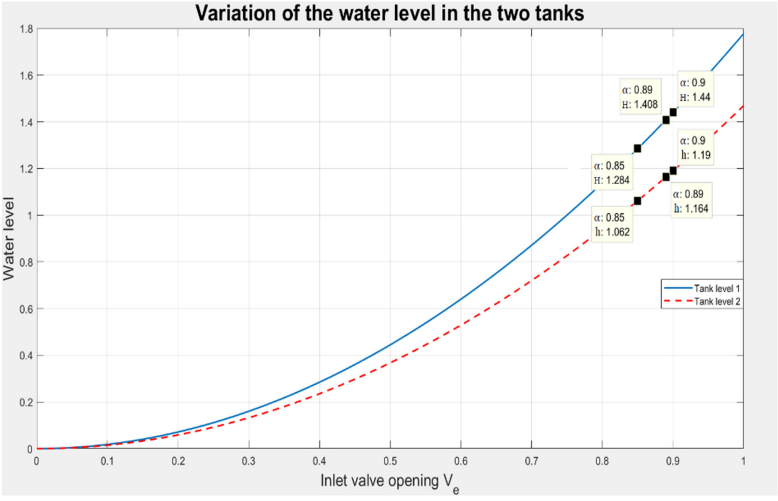

Fig. 2. Tanks water level variation with a fix $\beta = 60\%$ and $\alpha = \{90\%, 85\%, 89\%\}$.

In Fig. 2, it is observed that for an opening V_s of $\beta = 60\%$ with a fix opening V_e between $0 \leq \alpha \leq 1$, the water level of tank 1 is ascendent with $H = 1,44\,\text{m}$ when $\alpha = 90\%$. This also holds true for tank 2, where water level is also ascendent with $h = 1,1901\,\text{m}$ when $\alpha = 90\%$.

8 Mathematical Model Simulations for the Study Case

The models were implemented in the scientific software MATLAB R2017a. Execution was performed on a personal computer with an Intel (R) Core (TM) i5–8250U CPU @ 1.60 GHz 1.80 GHz processor with 6.00 GB of RAM.

Simulation and solution of the model were performed using the available components of Simulink in Matlab. The Runge-Kutta method was applied to the nonlinear model, whereas FCN transfer block was applied to the transfer functions of the linear model.

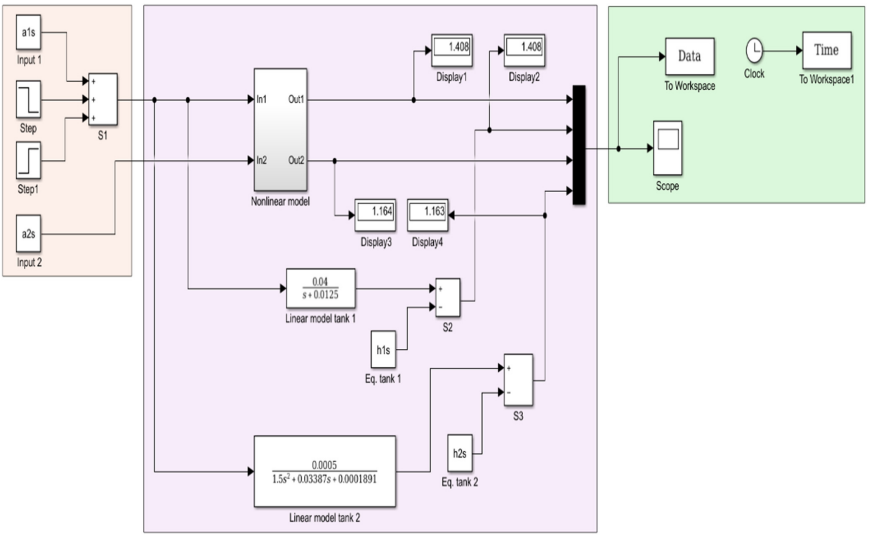

Fig. 3. Block diagram of the nonlinear and linear models of the control system in the two-tanks operated by valves.

Using the parameters of the study case (see Sect. 7), a simulation of the control system of the two-tanks in series operated by valves was performed. This allowed us to observed the behavior of the nonlinear and linear models over time (t). During simulation the outlet valve was fixed, while the inlet valve was regulated, generating variations in the tanks water levels. Figure 3, shows the simulation schematics in more detail.

Table 1, shows results of simulating the two-tank system. Variations were applied accordingly with Sect. 7. Variations were present over time in the inlet and outlet valves. At $t = 0$ s opening flows were set constant with $\beta = 60\%$ for the outlet valve, while $\alpha = 90\%$ was used in the inlet valve. At $t = 2000$ s, the opening flow was decreased by 5% with $\alpha = 85\%$ for the inlet valve. Then at $t = 3500$ s the opening flow is increased by 4% with $\alpha = 89\%$ for the inlet valve.

Figure 4, shows the dynamics of the water level in the tanks considering the nonlinear and linear models, water level changes are generated by opening variations in the inlet valve system. For an initial opening $\alpha = 90\%$ in the inlet valve both models achieved a stationary level with $H = 1{,}44$ m and $h = 1{,}19$ m for tanks 1 and 2 respectively. Simulation results of the system over time (t) are shown in Table 1. At $t = 2000$ s the opening flow is decreased a 5% ($\alpha = 85\%$) in the valve, lowering the water levels in both tanks. At $t = 2730,04461042856$ s, for the water level in tank 1, the linear and nonlinear models obtained stationary values of $H = 1,284$ m and $H = 1,28$ m respectively. Then, at $t = 2930,04421042856$ s, the water level in tank 2 achieved stationary values of $h = 1,062$ m and $h = 1,062$ m obtained by the linear and nonlinear models respectively (Figs. 3 and 4 illustrate this behavior). When the valve opening flow is increment in 4% ($\alpha = 89\%$) at $t = 3500$ s, both tanks began increase their water levels. Stationary water levels were reported for tanks 1 and 2 at $t = 4086,68774412396$ s and $t = 4286,68734412396$ s respectively. Reported values from the linear and nonlinear

Table 1. Simulation results of the two tanks system in series operated by valves.

Time	MNL Tank 1	ML Tank 1	MNL Tank 2	ML Tank 2
1755,76752188620	1,43999961546213	1,43999994814581	1,19006322338354	1,18961038075501
1855,76732188620	1,43999981673949	1,43999997161470	1,19007010100707	1,18961041827557
1955,76712188620	1,43999994148428	1,43999998796925	1,19007661192565	1,18961051856290
1999,99999999999	1,43999996527065	1,43999999125067	1,19007857220228	1,18961054610584
2000	1,43999996527065	1,43999999125067	1,19007857220228	1,18961054610584
2000,00000000001	1,43999996527062	1,43999999125064	1,19007857220228	1,18961054610584
2006,62022753665	1,42762552922792	1,42762381045521	1,18953227583623	1,18906508741603
2013,24045507329	1,41618994802250	1,41618160884516	1,18842716377639	1,18796379296354
2019,86068260992	1,40564560644850	1,40562259269335	1,18682848113206	1,18637369079115
2026,48091014656	1,39592856102461	1,39588169967422	1,18480798025361	1,18436680799015
2043,45579383099	1,37397699845610	1,37382742064916	1,17833656474925	1,17794968132097
2060,43067751541	1,35612519934906	1,35581044026832	1,17034600463791	1,17003641926653
2077,40556119984	1,34175096045615	1,34121411000183	1,16147069724134	1,16124926280197
2094,38044488427	1,33022817334516	1,32942523570303	1,15225034850163	1,15211247289125
2132,44192319865	1,31229179506012	1,31080678023652	1,13197291070193	1,13194399954401
2170,50340151303	1,30152646758370	1,29934376859632	1,11441257402178	1,11432661488807
2208,56487982741	1,29493841089593	1,29214035736583	1,10042875114882	1,10009968841506
2246,62635814179	1,29085477636207	1,28757119085586	1,08974991279288	1,08902443294862
2284,68783645618	1,28833600146111	1,28469764599414	1,08176200124191	1,08055230675180
2346,02712994927	1,28603600960128	1,28202144602056	1,07285656667335	1,07087189379413
2407,36642344237	1,28504416451864	1,28084244274790	1,06761650879413	1,06497258324618
2468,70571693546	1,28465614164376	1,28035653778811	1,06469503698353	1,06155760741119
2530,04501042856	1,28451657848358	1,28015854695064	1,06313497393943	1,05965336619567
2630,04481042856	1,28450199138253	1,28009611723224	1,06218529936912	1,05836715762164
2730,04461042856	1,28449232833391	1,28004774018748	1,06188545125269	1,05788602796148
2830,04441042856	1,28446315307823	1,27999947694808	1,06170862723026	1,05760877399812
2930,04421042856	1,28444421994232	1,27998435868292	1,06158863361176	1,05744735580074
3030,04401042856	1,28444099288541	1,27999230656735	1,06153403157967	1,05739229930755
3130,04381042856	1,28444268343003	1,27999873847668	1,06152035439243	1,05738977241296
3230,04361042856	1,28444398337189	1,28000066265365	1,06152042510593	1,05739853697128
3330,04341042856	1,28444444448303	1,28000056088689	1,06152256135333	1,05740420947107
3430,04321042856	1,28444451145156	1,28000018147776	1,06152385083300	1,05740595761033
3499,99999999997	1,28444450102677	1,28000003438405	1,06152425902254	1,05740614290177
3500	1,28444450102677	1,28000003438405	1,06152425902254	1,05740614290177
3500,00000000003	1,28444450102681	1,28000003438409	1,06152425902255	1,05740614290177
3507,40162983638	1,29538462686145	1,29098497575729	1,06208829554494	1,05794400387021
3514,80325967274	1,30536394543354	1,30105016775772	1,06321209453906	1,05902187647848
3522,20488950909	1,31444648322706	1,31025322951338	1,06481604827958	1,06056586350748
3529,60651934544	1,32271488885472	1,31866494200947	1,06681125129609	1,06249874795962
3548,11096637982	1,34067507038483	1,33702579284543	1,07286636118232	1,06842573572175
3566,61541341421	1,35497619184466	1,35176003303644	1,08008946373849	1,07558362256909
3585,11986044859	1,36626036454524	1,36347095781765	1,08787749150307	1,08338481008098
3603,62430748297	1,37513864792860	1,37274570539385	1,09575366352641	1,09135089196980
3643,13973962725	1,38808534217281	1,38640770450646	1,11169264046708	1,10767563635328
3682,65517177153	1,39582445181210	1,39465920081437	1,12501621757830	1,12153186360282
3722,17060391581	1,40058634427921	1,39976465438605	1,13538263785846	1,13245469802926
3761,68603606009	1,40355320734452	1,40295692903304	1,14320326210664	1,14078310672272
3801,20146820437	1,40537978786821	1,40493117821422	1,14902973472101	1,14703920686170
3872,57303718427	1,40719276114826	1,40690239902678	1,15615166019125	1,15473872909948
3943,94460616417	1,40786363852514	1,40763703817426	1,16004135200329	1,15898647420825
4015,31617514407	1,40807667932767	1,40787444408647	1,16201439900700	1,16116313231556
4086,68774412396	1,40813897465150	1,40794768607821	1,16296055066582	1,16221906700010
4186,68754412396	1,40816836759755	1,40798569094109	1,16354541048426	1,16288322641594
4286,68734412396	1,40817377735125	1,40799418184987	1,16371810203930	1,16308452358951
4386,68714412396	1,40817546660590	1,40799692960766	1,16376053032475	1,16313698514357
4486,68694412396	1,40817665153445	1,40799854536771	1,16377166975117	1,16315263635772
4586,68674412396	1,40817732235707	1,40799941485621	1,16377780373586	1,16316153865892
4686,68654412396	1,40817760586934	1,40799978129751	1,16378077435649	1,16316591598358
4786,68634412396	1,40817771501418	1,40799992140821	1,16378215450641	1,16316795136678
4886,68614412396	1,40817775525846	1,40799997239800	1,16378278211249	1,16316887230825
4986,68594412396	1,40817776977401	1,40799999044136	1,16378306375500	1,16316928245172
5000	1,40817777103356	1,40799999194735	1,16378309142460	1,16316932208532

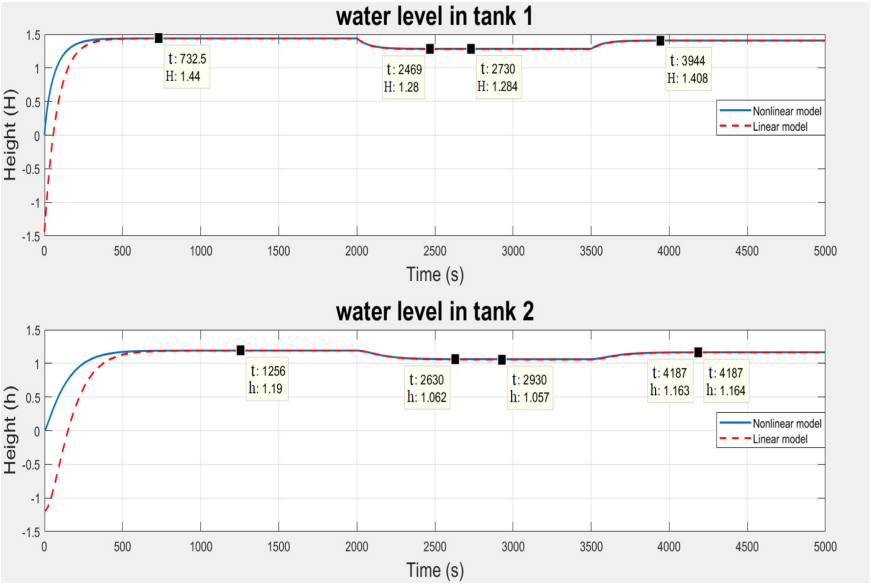

Fig. 4. System simulation of two series tanks operated by valves.

models were $H = 1,408\,\text{m}$ and $H = 1,408\,\text{m}$ for tank 1 and $h = 1,163\,\text{m}$ and $h = 1,164\,\text{m}$ for tank 2. Figures 3 and 4, show these results.

9 Conclusions and Recommendations

Using mathematical foundations such as differential equations theory, Jacobian matrix and eigenvalues allowed us to analyze the system stability of two series tanks. The stable equilibrium points were found analytically for the study case, where the opening flow was fix in the outlet valve, while opening variations occurred in the inlet valve. Thus, stable water levels were found in each tank, stabilizing the system.

The nonlinear and linear models applied to the study case were able to estimate in real time the stable water levels of the two-tank system. This ensured the demand of service, which coincided with the obtained analytical equilibrium points.

The nonlinear and linear models obtained similar results during the simulation process. However, to implement the control system, it is recommended to use the linear model, since it is composed by transfer functions which are less complex and more efficient to deploy.

It is advisable to implement the obtained results into a pilot plant. This will allow to apply the experimental phase, obtaining a utility design in the industry.

Finally, it is recommended to analyze the stability of the system with more than two tanks, especially considering flow opening variations in the inlet and outlet valves, such that: a) the inlet opening is constant while outlet flow is variable, and b) the inlet and outlet opening flows are variable.

References

1. Mahapatro, S.R., Subudhi, B., Ghosh, S., Dworak, P.: A comparative study of two decoupling control strategies for a coupled tank system. In: 2016 IEEE Region 10 Conference (TENCON). pp. 3447–3451 (2016). https://doi.org/10.1109/TENCON.2016.7848695
2. Bhamre, P.K., Kadu, C.B.: Design of a smith predictor based fractional order PID controller for a coupled tank system. In: 2016 International Conference on Automatic Control and Dynamic Optimization Techniques (ICACDOT), pp. 705–708 (2016). https://doi.org/10.1109/ICACDOT.2016.7877678
3. Younis, A.S., Moustafa, A.M., Moness, M.: Experimental benchmarking of PID empirical and heuristic tuning for networked control of double-tank system. In: 2019 15th International Computer Engineering Conference (ICENCO), pp. 162–167 (2019). https://doi.org/10.1109/ICENCO48310.2019.9027382
4. Keerthana, P.G., Gnanasoundharam, J., Latha, K.: Design of model reference adaptive controller for two tank conical interacting system. In: 2016 International Conference on Computation of Power, Energy Information and Communication (ICCPEIC), pp. 255–258 (2016). https://doi.org/10.1109/ICCPEIC.2016.7557205
5. Gurumurthy, G., Das, D.K.: A semi-analytical approach to design a fractional order proportional-integral-derivative (FOPID) controller for a TITO coupled tank system. In: 2019 IEEE Asia Pacific Conference on Circuits and Systems (APCCAS), pp. 233–236 (2019). https://doi.org/10.1109/APCCAS47518.2019.8953172
6. Naik, R. B., Kanagalakshmi, S.: Mathematical modelling and controller design for interacting hybrid two tank system (IHTTS). In: 2020 Fourth International Conference on Inventive Systems and Control (ICISC), pp. 297–303 (2020). https://doi.org/10.1109/ICISC47916.2020.9171218
7. Patel, H., Shah, V.: A fault-tolerant control strategy for non-linear system: an application to the two tank canonical noninteracting level control system. In: 2018 IEEE Distributed Computing, VLSI, Electrical Circuits and Robotics (DISCOVER), pp. 64–70 (2018). https://doi.org/10.1109/DISCOVER.2018.8674119
8. Reddy, B.A., Krishna, P.V.: Traditional and 2-SMC control strategies for coupled tank system. In: 2019 Third International Conference on Inventive Systems and Control (ICISC), pp. 682–687 (2019). https://doi.org/10.1109/ICISC44355.2019.9036440
9. Mfoumboulou, Y.D.: Design of a model reference adaptive PID control algorithm for a tank system. Int. J. Electr. Comput. Eng. **11**(1), 2088–8708 (2021). https://doi.org/10.1109/ICISC44355.2019.9036440
10. Raj, R.A., Deepa, S.N.: Modeling and implementation of various controllers used for Quadruple-Tank. In: 2016 International Conference on Circuit, Power and Computing Technologies (ICCPCT), pp. 1–5 (2016). https://doi.org/10.1109/ICCPCT.2016.7530245
11. Andonovski, G., Costa, B.S.: Robust evolving control of a two-tanks pilot plant. In: 2017 Evolving and Adaptive Intelligent Systems (EAIS), pp. 1–7 (2017). https://doi.org/10.1109/EAIS.2017.7954829
12. Mendes, J., Maia, R., Araújo, R.,Gouveia, G.: Evolving fuzzy controller, and application to a distributed two-tank process. In: 2018 International Conference on Electrical Engineering and Informatics (ICELTICs), pp. 55–60 (2018). https://doi.org/10.1109/ICELTICS.2018.8548831
13. Pérez, K., Vargas, H., Castro, C., Chacón, J., De la Torre, L.: Coupled tanks laboratory for teaching multivariable control concepts. In: 2018 IEEE International Conference on Automation/XXIII Congress of the Chilean Association of Automatic Control (ICA-ACCA), pp. 1–6 (2018). https://doi.org/10.1109/ICA-ACCA.2018.8609851

14. Ruiz, J.M., Giraldo, J.A., Duque, J.E., Villa, J.L.: Implementation of a two-tank multivariable process for control education. In: 2020 IX International Congress of Mechatronics Engineering and Automation (CIIMA), pp. 1–6 (2020). https://doi.org/10.1109/CIIMA50553.2020.9290318
15. Juan, Anzurez M., José, P.G., Omar, C.S.: Estabilidad de Sistemas No-lineales: Sistema de Nivel de Líquidos de Dos Tanques Interconectados. RIEE&C (2008)
16. Singh, S., Bangia, S.: LabVIEW based analysis of two input and two output interacting tank system. In: 2016 IEEE 1st International Conference on Power Electronics, Intelligent Control and Energy Systems (ICPEICES), pp. 1–5 (2016). https://doi.org/10.1109/ICPEICES.2016.7853726
17. Eredias, C.A., Pérez, M.E., Martínez, M.F.: Solución numérica y linealizada de un modelo de sistema planar autonómo no lineal, para un equipo de dos tanques interconectados. Pistas Educativas **40**(130) (2018)
18. Ogata, K.: Modern control engineering. Prentice Hall. Cuarta Edición (2002)
19. Burden, R.L., Faires, J.D., Burden, M.A.: Numerical Analysis 10th edition, Cengage Learning Editores S.A. (2016). ISBN-13 978-1305253667, ISBN-10 1305253663