# Application to a Player Operating in Italy of an AHP Model for the Identification of the Most Advantageous Technical Alternatives in the Management of the Integrated Water Service

Maria Macchiaroli[1(✉)], Luigi Dolores[1], Vincenzo Pellecchia[2], Gianluigi De Mare[1], Antonio Nesticò[1], and Gabriella Maselli[1]

[1] University of Salerno, Via Giovanni Paolo II, 132, Fisciano (SA), Italy
{mmacchiaroli, ldolores, gdemare, anestico, gmaselli}@unisa.it
[2] Ente Idrico Campano, Via A. De Gasperi, 28, Napoli (NA), Italy
vpellecchia@enteidricocampano.it

**Abstract.** The value of water as a resource has now been recognized on a global scale, albeit with different levels of awareness due to its availability and accessibility. All western countries have regulated the management sector of this resource (Integrated Water System – SII), regarding both its distribution as well as the purification and collection of sewage waste. Italy has also moved towards privatizing its management, proposing a collaborative mechanism between the public regulatory Authority and the private operator. The investments for the maintenance and development of the asset are therefore supported by the private investors. The model proposed in this work is based on the use of AHP to encourage the conciliation of opposing interests and rationalize a rather complex regulatory phase. It facilitates the selection of technical investment alternatives for the improvement of the SII supply standards.

**Keywords:** Integrated water service · Water infrastructure · Choice of alternatives · Urban water management · AHP · Economic evaluation of projects · Multi-criteria analysis

## 1 The AHP Model for the Rational Choice of Intervention Alternatives in the Defining of the Intervention Program

### 1.1 The Regulatory Framework in Italy

As illustrated in a recent study [1], the Water Framework Directive (2000/60/EC) proclaimed by the European Commission describes the problem of water resource management in economic (access to the resource for both civil and business use), social

The authors contributed equally to this work.

© Springer Nature Switzerland AG 2020
O. Gervasi et al. (Eds.): ICCSA 2020, LNCS 12255, pp. 146–161, 2020.
https://doi.org/10.1007/978-3-030-58820-5_11

(health standards), and environmental (safety of the water resource) terms. The same Directive introduces the essential principle of *full cost recovery*; it means that the Operator who manages the water service must cover with the applied tariffs all kind of costs, from management and capital costs, to environmental ones [2–5]. Based on this framework, European countries have improved their own management model for Integrated Water Service (SII).

In Italy, a complex regulatory framework characterizes the water service sector; it is the result of a consistent regulatory stratification, which has been accompanied by neither a substantial coordination intervention nor a legislative organisation [6].

The issuing of the Law n. 36/94 (Galli Law) was a historical moment for Italian water legislation, since it defined the meaning of Integrated Water Service (SII) as a set of public services for the *collection*, *supply* and *distribution* of water for civil use, along with *sewerage* and *wastewater* treatment (including industrial uses of the water managed within the same service). The definition was subsequently updated by art. 141 co.2 of Legislative Decree 152/2006 (Consolidated Environmental Text - TUA).

In the years following the issuing of Law n. 36/94, the legislator intervened several times on the matter of local public services and with specific interest on water services, improving the provisions regarding the institutional and organizational set-up of the sector. These interventions included the Legislative Decree of 3 April 2006, n. 152, whose Part III, Sect. 3, organically regulates the water sector, incorporating Law n. 36/1994 and prescribing more precise indications on the tasks and activities belonging to the various institutional interested actors.

To date, the current government is preparing legal hypotheses that could even bring the management of water resources back into the public sphere, thus completely revolutionizing the private sector that was established with the Galli reform. Law n. 36/94 introduced a vertical integration of the aqueduct, sewer and purification activities, along with a functional integration of the existing services. In this way, the legislator wanted to create economies of scale in an industrial management of the entire water service (from caption to wastewater treatment), with the dual aim of encouraging investments in the urban water management sector, while also creating a management capable of self-financing, through reveues so as to cover both the costs induced by the greater demand and the arrears existing in the sewerage and purification sector [7, 8]. The Galli Law also introduced a clear separation between the planning and control functions, assigned by the legislator to the local Authority (EGA – Area Governance Body), and the production and management functions, entrusted to new subjects operating according to a business logic and chosen by the tender.

The reform therefore aimed to introduce forms of competition in the water service sector in order to ensure greater economic efficiency in the production and management of water resources as well as exploit the economies of scale and scope typical of network services. The development of services requires huge financial means that should be obtained through the application of tariffs capable of highlighting both the social opportunity cost of the various uses of the water resource and the opportunity cost of the investments destined for the development of the services.

In synthesis, the Galli reform aimed for a model in which Local Authorities, through the EGA, carried out the main regulatory activities locally. The EGA is reserved the preparation of the Area Plan (PDA), the choice of the form of

management, the assigning of the service, the controlling of the Operator's work and the periodic adjustment of the tariffs.

Based on this regulatory context, the relationships between EGA (local Authority) and private operator, regardless of the choice of the form of management of the service, are negotiated through a contract: the management agreement. It is therefore possible to state that the SII is characterized by *a regulation by contract*, combined with regulation factors independently found in a national tariff system (*Regulatory schemes*) and in the functions of the local regulatory body (EGA). Subsequent amendments to the TUA (Consolidated Environmental Text) of 2006 resulted in the repeal of the Galli Law, while the Prime Ministerial Decree of 20 July 2012 defined in art. 1 the functions relating to water services for the Ministry of the Environment and the Protection of the Territory and the Sea (MATTM) and in art. 3 the regulation and control functions transferred to the former AEEGSI (Authority for Electricity, Gas and Water Works), today ARERA (Regulatory Authority for Energy, Networks and Environment), which immediately started reorganizing the service.

### 1.2 The Intervention Program and a Comparison Between the Technical Intervention Alternatives

ARERA, acting as national Authority in the regulation of water service, with Resolution 585/2012/R/Idr (which incorporates the indications of art.154 c. 4 of Legislative Decree 152/2006) assigned the local Authority (EGA) the task of preparing the proposal of the tariffs that the Operator will apply. This proposal must contain the Intervention Program (PoI) which details the investments that the Operator will have to make within the regulatory four-year period identified by the Authority. This is an instrument with public matrix priority objectives (social, economic and environmental of the community concerned), all borrowed from the PDA (Area plan defined by the EGA) but with careful consideration of the business aims of the Operator, however relevant for the financial sustainability of the management model [9–11]. While the law attributes the responsibility for the tariff proposal to the EGA, the necessarily concerted scope of the tariff construction process is evident, in a close comparison between the public and private operators. These principles are contained in Authority regulatory directives such as 643/2013/R/idr, 664/2015/R/Idr and 917/2017/R/Idr (Technical Quality Regulation - RQTI). ARERA absorbs the European guidelines within the tariff proposal, requesting, for the analysis of intervention programs, the explicit definition and evaluation of investment alternatives in order to solve the critical issues identified in the area of competence. Moreover, the national Authority specifies that the possible alternatives must always be compared at least with the zero option or the do-nothing option.

### 1.3 The Centrality of the Intervention Program

As mentioned, in the PoI, the local Authority indicates the investments that the Operator must make in the four-year programming period to respond to any emerging needs in the area of competence. In general terms, the needs of the entire ATO (Optimal Territorial Area, a reference territorial dimension introduced by Galli Law in

order to achieving adequate management dimensions and creating economies of scale) are listed in the PDA (Area plan defined by the EGA) within a set of critical issues $\{C_A\}$ and described therein with respect to their relevance and the impact they determine. ARERA in the Resolution 3/2014-DSID identified 40 critical issues, classified into 7 thematic areas, to which each EGA had to trace the problems encountered in its area of competence. Subsequently, with the Resolution 2/2016-DSID, the classification of the critical issues was more detailed by presenting 8 *Areas*, 57 *Sub-areas* and 137 critical issues. The EGA remains, however, free to measure them according to its own performance indicators. In recent years, the Authority, with the Resolution 1/2018-DSID, changed the classification of the critical issues again. The current overall classification structure is shown in Fig. 1. There are *Areas* regarding management problems (for example: criticalities referred to the management of the relationship with final users) and others regarding technical problems (for example: problems regarding wastewater treatment). Each *Area* includes several *Sub-Areas* and finally, each of the *Sub-Areas* includes the *critical issues*. For example, the DIS Area – *Critical issues in the distribution* includes the Sub-Areas DIS1 – *Inadequacy of the distribution infrastructures*, DIS2 – *Pressure problems*, etc. Than, the Sub-Area DIS1 presents the critical issues DIS1.1 – *Partial or total absence of the distribution networks*, DIS1.2 – *Inadequate physical conditions of the networks and distribution systems*, etc.

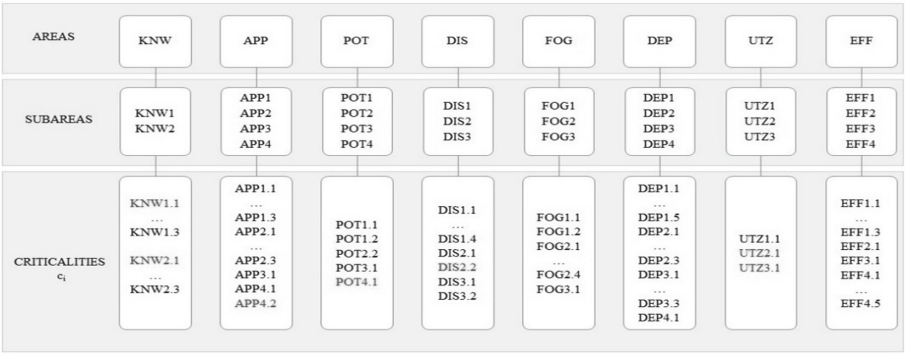


**Fig. 1.** Complete ramification of the critical issues {C} imposed by the Authority. In red, an example of the subset $\{C_T\}$. Source: [1]

In summary, there is a general classification of the critical issues {C} carried out by ARERA that is specified for each ATO in a subset $\{C_A\} \in \{C\}$.

The defining of the critical issues $c_i$ in the PDAs often included a descriptive characterization of these, without indicating the parameters that could measure them. This often caused the lack of a clear, evident and shared correspondence between the critical issues and the related indicators. ARERA, with resolution 89/2017/R/Idr, therefore, developed and shared of a series of $Pc_i$ indicators (not imposed, but only suggested) in order to quantification the infrastructural and operational criticalities of the integrated water service. Lastly, with the Resolution 1/2018-DSID, ARERA associated a single or multiple technical quality indicators with most of the critical

issues identified. At present, the use of these indicators is not obligatory for the EGAs, but preferable. On the other hand, the use of the RQTI macro-indicators for the measurement of the technical quality standards is mandatory. When the are multiple Operators who manage different part (T) of an ATO, the subset $\{C_A\}$ has to be compared with the specificities of each of these, determining a subset of critical issues $\{C_T\} \in \{C_A\}$ for which coherent and congruous investments will have to be planned. For each criticality of the subset of territorial criticalities ($\forall c_i \in \{C_T\}$), the EGA and the Operator (even if the standard formally attributes this responsibility only to the EGA) will have to agree to identify, with respect to a multiplicity of possible design solutions, the project $a_j$ (action) to be included in the PoI in order to decrease the impact of the criticality $c_i$. The selection process of the best project solutions $a_{Mi}$ among other investment proposals must be explicit and verifiable in the drafting of the PoI.

### 1.4 The Hierarchical Analysis Model

The model proposed in the aforementioned study [1] satisfies the selection needs of the project alternatives requested by the national Authority and is based on the use of the AHP methodology in order to comparing alternatives.

The multi-criterion analysis is among the methodologies recommended by ARERA in the Resolution 2/2016-DSID. The choice of the AHP is justified on the basis of the information profile to be processed which, as mentioned, has qualitative and quantitative characteristics, with it requiring a multi-criteria type tool [12–16].

This model innovates the regulatory approach for three reasons.

Firstly, the model outlines an original way of selecting the best project alternatives $a_{Mi}$ to solve the problems of the Service. Second, the model allows to identify project alternatives that may have relevance for more than one criticalities, thus rewarding multi-objective technical solutions. Moreover, it introduces three new criteria, as compared to those proposed by the national Authority, able to define the economic and financial range of the project solutions. The third reason is that the model configures a final hierarchical rout of the interventions selected $a_{Mi}$, with respect to the needs set out by the EGA in the PDA, capable of guiding the negotiation between the EGA and the Operator currently compulsory between the community interests and business objectives. Among the $a_{Mi}$ defined to resolve the various $c_i$, some are more oriented in favour of the public operator, while others in favour of the private one. It is obvious that each Operator tends to privilege the investment in those segments (for example, water compared to sewerage) or in those activities (for example, the reduction of losses due to populous agglomerations compared to the construction of a new network branch useful for a small urban fraction) which have a higher and more immediate financial profitability [17–24]. Figure 2 show the logic of the first and second objectives of the hypothesized model. The third goal of the model is incorporated in the implementation of the first two ones. It can be useful to independently represent it, because in the current legislation, there is no reference to similar temporal hierarchization of the interventions to be executed in the PoI. So, this step is completely original with respect to legal indications. However, this study does not explicitly take this into account, postponing it for a later study.

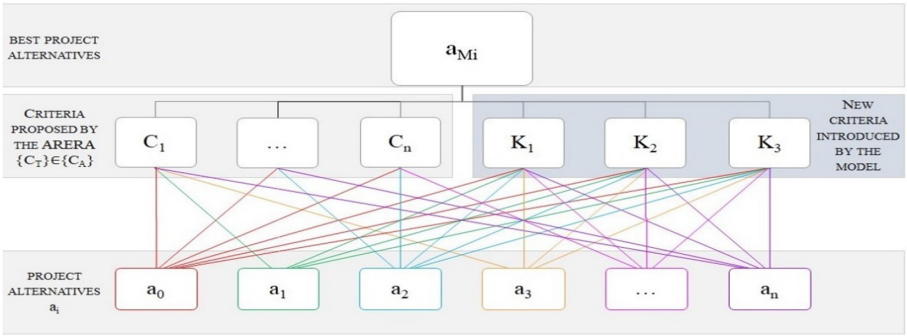


**Fig. 2.** The proposed model, rationalization in the choice of project alternatives $a_{Mi}$. Source: [1]

## 2 Application of the Model to the Case of an Italian Player

The model referred to and schematized in paragraph 1 was subsequently applied to a real case of Intervention Program (PoI) developed by an Operator in southern Italy under the guidance of the Research Group that has produced this article. The company in question has consented to the implementation of the protocol and, within the limits of scientific collaboration applied to a business, was willing to carry out the process as outlined by the Research Group. The Management Company (henceforth Utility) is characterized in reference to the territory served. The implementation of the phases is illustrated in the flow chart of Fig. 3.

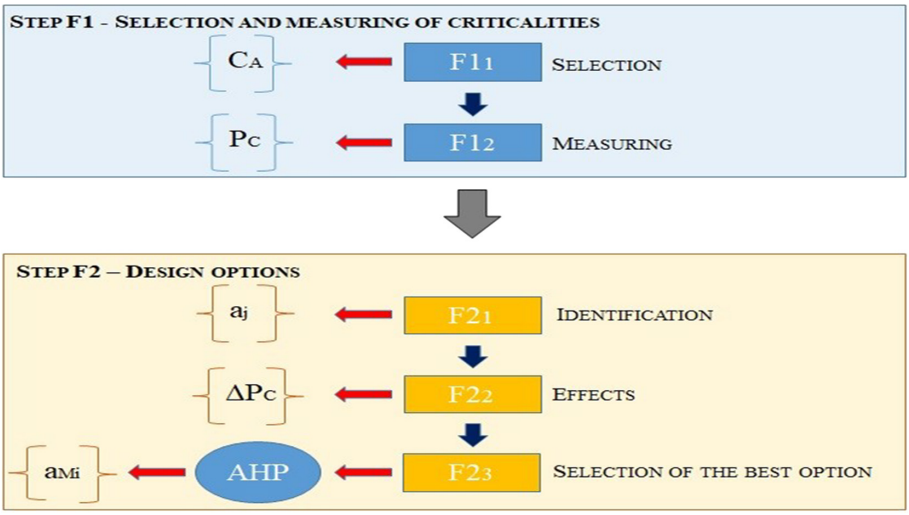


**Fig. 3.** Flow chart of the logic of the model presented

The discussion ends with the summary of the results obtained.

It is important to highlight how the application results are the result of a demanding mediation between the disciplinary principles responsible for optimizing the process and the stringent business logic of the interlocutor, so that the apparent simplicity of certain solutions and/or determinations also takes place after a complex concertation process between the subjects (operator and research group) with the same purposes (process optimization) but with obviously different cultural backgrounds and evaluation criteria. It should also be noted that the process described ordinarily takes place in symbiosis between the Operator and the EGA, given that the strategic principles to which the Retailer must comply in the implementation phase are contained in the PDA and are concretely declined by the EGA in the concertation phase of the PoI. The EGA is still legally responsible for the intervention program (PoI).

### 2.1 Management and Infrastructural Characteristics of the Managed Territory

The Utility being analyzed manages the Integrated Water Service of 20 municipalities in the Campania Region, for a total of approximately 118,000 inhabitants and a total area of 677 $km^2$. From the analysis of the information contained in the PDA, it is also possible to detail the estimated population served by the distribution and sewerage for the different municipalities (the data divided by municipalities, impossible to summarize in this work, can be requested directly from the authors). Overall, the distribution service covers 97% of the total resident population. Whereas, the percentage of the population served by the sewer is lower, reaching around 82%. The purification service is only partially managed by the Utility.

### 2.2 Application of Phase $F1_1$ – *Selection of the Critical Issues*

Referring to the flow chart of Fig. 3, which sets out the logical-implementation path specific to the model, there is then the operational implementation of each single phase. In order to clarify the phase $F1_1$, the work cannot be separated from the analysis of the critical issues $\{C_A\} \in \{C\}$ that characterize the delivery of the SII in the territory of the entire ATO. These critical issues are identified in the documents prepared by the local Area Governance Body (EGA), relating to the 2012 Update of the 2003 Area Plan drawn up on December 2012. Specifically it is:

- Volume I: Analysis of the current state – Requirements – Resources – Criticalities and Objectives of the Plan – Intervention Plan – Investment Plan;
- Volume II: Investment Plan and Tariff Development;
- Volume III: Description of the interventions.

In addition to the critical issues, the categories of the interventions aimed at solving them are consequently identified in the EGA documents.

The interventions in general deal with the restructuring and reconstruction of existing works (reconstruction of old networks and plants due to age, adaptation and extraordinary maintenance of existing treatment plants and so on); the construction of new works (completion of the water and sewage networks, new purification systems for

unused residential areas, interconnections of the water supply networks to guarantee the continuity of the service, etc.); safeguarding the resource emitted from wells and springs.

The planning of the Area Plan selects interventions on the infrastructures of the SII to be paid by each Operator present in the territory. The PoI developed in this article (i.e. the one that the Operator and the Research Group shared in the process that is described here) defines the implementation of the Area Plan according to the indications of Legislative Decree 152/2006, since it includes not only interventions on infrastructures but also interventions aimed at solving critical issues related to management. In the particular case of the Utility in question, for the managed compartments, the criticalities of the SII $\{C_T\} \in \{C_A\}$, were identified through the use of the alphanumeric codes shown in Annex 1 of Resolution 2/2016 – DSID of the Authorities, reclassified for the Municipalities managed. Table 1 lists and defines, by way of example, the critical codes relating to three of the twenty Municipalities.

**Table 1.** Critical issues identified in the management of the SII pursuant to the Resolution issued by the ARERA 2/2016 – DSID for three municipalities belonging to the territory under the jurisdiction of the utility

| ID Municipality | 1 | 4 | 13 |
|---|---|---|---|
| A – Water supply | – | A7.1, A7.4 | A7.1, A7.4 |
| B – Distribution | B6.3, B10.2, B1.3, B1.2, B1.1, B4.1, B1.4 | B6.3, B10.2, B1.3, B1.2, B1.1, B4.1, B1.4 | B6.3, B10.2, B1.3, B1.2, B1.1, B4.1, B1.4 |
| C – Sewerage | C2.1, C2.6, C2.7 | C2.1, C2.6, C2.7 | C2.1, C2.6, C2.7 |
| D – Depuration | D2.2, D2.3 | D2.2, D2.3 | D1.1, D2.2, D2.3 |
| K – Knowledge of the infrastructure | K2.1, K3.1 | K2.1, K3.1 | K2.1, K3.1 |
| M – Management | M1.3, M1.4, M1.5, M3.1 | M1.3, M1.4, M1.5, M3.1 | M1.3, M1.4, M1.5, M3.1 |

For example, it is worth noting how for Municipality 1, there are no critical issues in Area A of the water supply; while there are seven critical issues (B1.1, B1.2, B1.3, B1.4, B4.1, B6.3, B10.2) in the distribution segment.

The problems relate to (B1.1) the physical conditions of the pipelines in the distribution networks; (B1.2) the physical conditions of the civil works of the plants; (B1.3) the physical conditions of the mechanical and electromechanical equipment; (B1.4) the failure rate of the pipes; (B4.1) the level of losses along the distribution pipelines; (B6.3) the excessive level of pressures; (B10.2) the malfunction or age of the user metres.

There are also three critical issues (C2.1, C2.6, C2.7) in the sewerage segment (black and mixed networks); two in the treatment plants (D2.2, D2.3) as well as in the knowledge of the infrastructures (K2.1, K3.1); four in the business management segment (M1.3, M1.4, M1.5, M3.1).

The Utility, on the other hand, did not find any critical issues in its management with regards to Areas P (Criticalities in the drinking water plants) and G (Criticalities in the user services).

### 2.3 Application of Phase $F1_2$ – *Measurement of the Critical Issues*

As illustrated in Fig. 3, step $F1_2$ consists of identifying, for each of the identified critical issues, the $Pc_i$ performance indicator that measures them. The ARERA requires, in particular, for each identified criticality the name of the corresponding performance indicator, the formula underlying the determination, the degree of reliability of the data underlying it and the current level promptly detected/estimated of the indicator that measures the impact of the identified criticality. During the course of this work, for the identification of the performance indicator, reference was constantly made to the indications of the Resolution ARERA 89/2017/R/Idr in cases where the data required for the calculation of $Pc_i$ resulted in the availability of the Utility. If the Operator did not possess the appropriate information to quantify the ARERA indicator, an ad-hoc indicator was developed in accordance with the available datasets [25].

All the indicators useful in the model for the individual criticalities were therefore developed; an example of an indicator is given for Areas A and B.

**Area A - Criticalities in the water supply (collection and abstraction pipes).**
*Criticality A7.1 – Inadequate physical conditions of the pipelines of the supply networks*

For the measurement of this criticality, the indicator suggested by the ARERA and adopted in the model is summarized in the following table. The calculation values are also provided (Table 2).

**Table 2.** Calculation of the performance indicator for the criticality A7.1

| Name | Code | Formula | ∑Li (m) | $Pc_{A7.1}$ (years) |
|---|---|---|---|---|
| Average age of the abstraction pipes | A7.1a | ∑(Ai*Li)/∑Li where Ai = age from the year of entry into operation of the i-th abstraction pipe section, Li = length of the i-th abstraction pipe section | 117.508 | 50,0 |

**Area B - Critical issues in distribution.**
*Criticality B1.1 – Inadequate physical conditions of the pipelines of the distribution networks*

For the measurement of this criticality, the indicator suggested by the ARERA and adopted in the model is summarized, along with the values obtained, in the following table (Table 3).

**Table 3.** Calculation of the performance indicator for the criticality B1.1

| Name | Code | Formula | ∑Li (m) | $Pc_{B1.1}$ (years) |
|---|---|---|---|---|
| Average age of the pipelines of the distribution networks | B1.1a | ∑(Ai*Li)/∑Li where Ai = age from the year of entry into operation of the ith section of distribution network pipelines, Li = length of the i-th section of distribution network pipelines | 1.177.925 | 45,0 |

## 2.4 Application of Phase $F2_1$ – *Identification of the Alternatives*

As part of phase $F2_1$, possible project interventions were outlined aimed at solving the critical issues described in the previous paragraph.

According to the Authority, the aforementioned phase and the subsequent one ($F2_2$) are mainly the prerogative of the Operator. Therefore, following steps $F2_1$ and $F2_2$, the Operator submits to the EGA the proposal relating to the interventions potentially useful for improving the level of impact of the critical issues.

As explicitly requested by the Authority, a set of project options (alternative $a_j$) for each intervention is identified which also includes the scenario characterized by the absence of the implementation of the intervention (*Alternative 0*). Project solutions can often lead to improvements with respect to more than one of the criticalities. Therefore, in compliance with ARERA terminology, the project solution capable of generating improvements on one or more critical issues will be known as *intervention* hereonin. In order to comply with the ARERA requirements, each intervention is uniquely identified by an identification code (intervention ID), represented by a progressive number from 1 to N (where N is the total number of interventions resulting from the evaluation made).

For each critical issue, the intervention strategies concern:

- *Restoration/Replacement interventions* (R.S.) aimed at the reconstruction of those works which, due to technological obsolescence, age or poor state of maintenance, are no longer able to perform the service for which they are intended;
- *Extraordinary Maintenance Interventions* (M.S.): interventions whose purpose is to keep existing works in a state of efficiency through adequate scheduled maintenance, which involves limited substitutions or improvements;

Overall, the Utility offers 11 interventions; for 8 of these (ID 1, 2, 3, 4, 5, 6, 7, 10) it gives 3 project options (including Alternative 0); vice versa, for the remaining three interventions (ID 8, 9 and 11), the Operator is limited to identifying a single supererogatory project alternative to Alternative 0.

Table 4 describes two of the eleven interventions, those with ID 1 and 3. For these there are three technical alternatives (n.TA). The fourth column of Table 4 indicates the critical issues ($c_i$) that each intervention resolves. Column 5 shows the type of numerical indicator ($Pc_i$) which describes each criticality; Column 6 shows the unit of measure (UM). Columns 7 and 8 show the values (improving) that the numerical indicator assumes where the first technical alternative (Objective 1 – O1) is applied or

the second technical alternative (Objective 2 – O2) is applied. The third alternative is that of not intervening and therefore the performance indicator does not change compared to the initial state.

**Table 4.** Effects of the alternatives on the identified critical issues

| Intervention ID | Description | n. TA | Ci | $Pc_i$ | UM | O1 | O2 |
|---|---|---|---|---|---|---|---|
| 1 | Rehabilitation of the deteriorated water network | 3 | B1.1 | Average age of the pipelines of the distribution networks | years | 44,8 | 45,0 |
| | | | B1.4 | Distribution pipeline breaks | n/100 km/year | 62,8 | 78,1 |
| | | | B4.1 | Percentage of water losses | % | 54,6 | 56,1 |
| 3 | Adjustment of distribution systems | 3 | B1.2 | Physical condition of the civil works of the plants | % | 86,1 | 95,0 |
| | | | B1.3 | Physical conditions of the mechanical and electromechanical equipment | % | 4,9 | 9,0 |
| | | | M3.1 | Adequate plant rate (safety) | % | 2,2 | 6,6 |

## 2.5 Application of Phase $F2_3$ – *Selection of the Preferable Alternative*

After having identified the criticality $c_i$ and measured the relative performance indicator $Pc_i$ (as illustrated in phases $F1_1$ and $F1_2$), during step $F2_1$, the set of solutions $a_j$ relating to the criticality $c_i$ was defined. Finally, with phase $F2_2$, the objective levels of the performance indicators (Oi) that are expected to be achieved with the realization of the alternatives $a_j$ were defined. Phase $F2_3$ of the model involved the application of the AHP methodology [26, 27] to identify the best alternative among the $a_j$ proposed by the Utility. The AHP was applied for interventions, defining the following comparative hierarchy for each of the eleven identified:

- level 1 (general objective of the evaluation), identification for each intervention of the best project alternative $a_M$;
- level 2, evaluation criteria against which to make the selection;
- level 3, alternatives being compared.

The hierarchy described is presented in the figure below (Fig. 4).

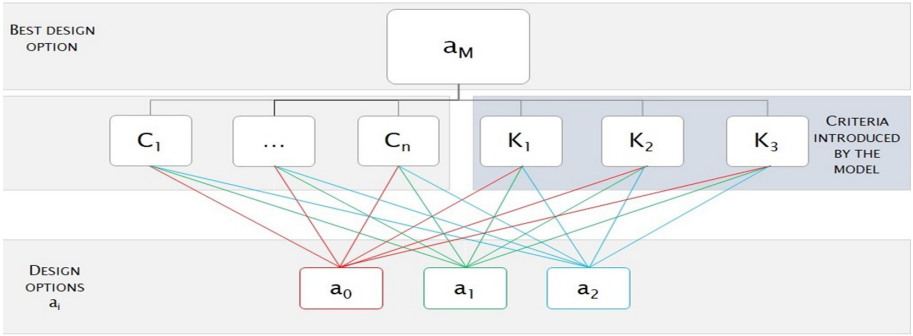


**Fig. 4.** The AHP hierarchy of the model for each intervention

In this step, the criteria are considered equivalent.

The project alternatives of each individual intervention are compared in pairs with respect to the critical issues for which they are conferred and with respect to the three new criteria introduced by the model. The latter are:

- $K_{i1}$ – Population, i.e. the number of users who benefit from the implementation of the project alternative $a_j$;
- $K_{i2}$ – Investment cost, intended as the capital cost of the project alternative $a_j$, with a negative impact on the growth in value of the predictor;
- $K_{i3}$ – Maintenance cost the maintenance cost that the Operator must bear if realizing the alternative $a_j$.

The Table 5 illustrates the values of the $K_{ir}$ criteria provided by the Operator, and then validated by the Regulator, for the alternatives (including Alternative 0) proposed for two of the eleven Interventions. Having defined all the criteria, both the performance indicators illustrated in step F22 as well as the additional criteria introduced by the proposed model (Ki1, Ki2 and Ki3), the AHP methodology is applied to select the best alternative.

**Table 5.** Values of the criteria $K_{i1}$, $K_{i2}$ and $K_{i3}$

| Intervention ID | Alternative $a_j$ | Population $Ki_1$ | Cost of the intervention $Ki_2$ (€) | Annual maintenance costs $Ki_3$ (€) |
|---|---|---|---|---|
| 1 | A0 | 0 | 0 | 361.120 |
| | A1 | 1.419 | 1.111.200 | 273.800 |
| | A2 | 1.408 | 294.682 | 340.400 |
| 3 | A0 | 0 | 0 | 157.350 |
| | A1 | 15.342 | 475.000 | 127.500 |
| | A2 | 37.275 | 1.058.000 | 89.750 |

The process of comparing the alternatives in pairs with respect to the related criteria is the result of a close consultation between the Regulator and the Utility; concertation that led to the expression of an agreed judgment, representative of a shared position with respect to the different interests.

Using intervention 1 as an example, Fig. 5 illustrates the comparative hierarchy adopted for the implementation of the AHP and the results obtained.

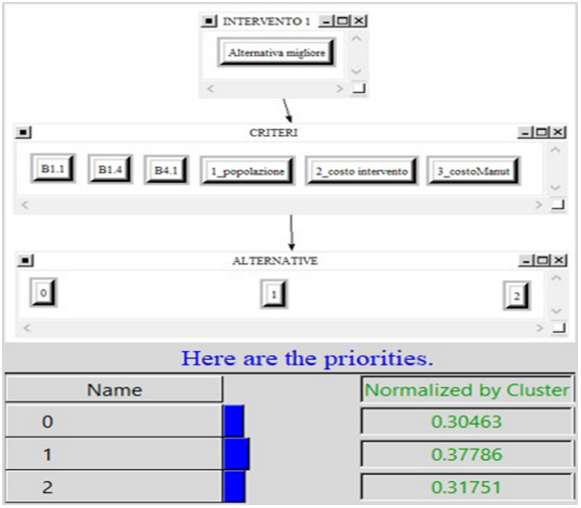


**Fig. 5.** Comparative hierarchy and results for Intervention 1

It should be highlighted how in this phase the achievement of an agreed judgment is not particularly complex, given that the information framework useful for assuming a critical position is mainly the prerogative of the Operator.

The results obtained are summarized in Table 6, which describes the winning alternatives after the application of the AHP for two interventions as an example.

**Table 6.** Synthesis of the best alternatives

| Intervention ID | Description | Selected alternative and description | Ci |
|---|---|---|---|
| 1 | Rehabilitation of the deteriorated water network | *Alternative 1*, replacement of a part (approximately 4,600 m) of the portion of the network deemed most critical by the Utility | B1.1<br>B1.4<br>B4.1 |
| 3 | Adaptation of Distribution networks | *Alternative 2*, consists of the restoration, both from the point of view of civil works as well as the point of view of electromechanical equipment, of n. 23 plants | B1.2<br>B1.3<br>M3.1<br>A7.4 |
| Tot Investments on the 11 interventions (€) | | | 4.933.113 |

Finally, the same table gives an indication of the overall cost of the interventions which, for the 2016–2019 four-year period, is equal to approximately € 5,000,000. This is an amount which translates into an investment expenditure of approximately €42/inhabitant.

This value is equal to one third of that recorded by the ARERA in 2017 for the South, which was € 121/inhabitant [28].

The overall incidence of the interventions on the turnover stands at 13.7%, a value which appears, however, entirely in line with Althesys' findings [29] in recent years; from the latter, it is clear that the incidence of investments on the turnover of the main Italian utilities varies between 9.3 and 13.3%; a percentage that grows in inverse proportionality with respect to the size of the Operator.

## 3 Conclusions

The study describes a model useful for concretely applying the regulatory provisions on tariff regulation for the Integrated Water Service in Italy. It is capable of rationalizing the project choices for investments in the water sector and it is completely in compliance with the Intervention Program as ruled by the ARERA Resolutions 664/2015/R/Idr and 918/2017/R/Idr.

Through the AHP application the model allows to compare the project alternatives with respect to the criteria indicated by the national Authority and the innovative criteria which reconcile both the objectives of economic (population involved in the investment) and financial relevance (investment and maintenance costs).

Moreover, the model allows to reward those project solutions that simultaneously solve more problems, thus reducing intervention times while respecting the principle of maximum cost-effectiveness of the intervention.

Finally, the model can help the consultation between the public and private sectors, by rationalizing the decisive negotiation phase for the temporal scan of investments to be made with the Opertor's funds.

In a forthcoming publication, the model will be implemented on this last step with the aim of highlighting the effects of reconciling complex, often conflicting, objectives.

To date, there are no examples of models with similar characteristics in current specialized bibliography.

## References

1. Macchiaroli, M., Pellecchia, V., D'Alpaos, C.: Urban water management in Italy: an innovative model for the selection of water service infrastructures. WSEAS Trans. Environ. Dev. **15**, 463–477 (2019). ISSN/E-ISSN: 1790-5079/2224-3496
2. Nesticò, A., De Mare, G., Frusciante, B., Dolores, L.: Construction costs estimate for civil works. a model for the analysis during the preliminary stage of the project. In: Gervasi, O., et al. (eds.) ICCSA 2017. LNCS, vol. 10408, pp. 89–105. Springer, Cham (2017). https://doi.org/10.1007/978-3-319-62404-4_7

3. Canesi, R., Marella, G.: Residential construction costs: an Italian case study. Int. J. Appl. Eng. Res. **12**(10), 2623–2634 (2017)
4. De Mare, G., Nesticò, A., Macchiaroli, M.: Significant appraisal issues in value estimate of quarries for the public expropriation. Valori e Valutazioni **18**, 17–23 (2017). ISSN: 20362404
5. De Mare, G., Nesticò, A., Macchiaroli, M., Dolores, L.: Market prices and institutional values comparison for tax purposes through GIS instrument. In: Gervasi, O., et al. (eds.) ICCSA 2017. LNCS, vol. 10409, pp. 430–440. Springer, Cham (2017). https://doi.org/10.1007/978-3-319-62407-5_30
6. Mazzei, A.: Manuale operativo per la regolazione del servizio idrico integrato. Franco Angeli, Italy (2017)
7. D'Alpaos, C.: The value of flexibility to switch between water supply sources. Appl. Math. Sci. **6**(125–128), 6381–6401 (2012)
8. D'Alpaos, C.: The privatization of water services in Italy: make or buy, capability and efficiency issues. In: Mondini, G., Fattinnanzi, E., Oppio, A., Bottero, M., Stanghellini, S. (eds.) SIEV 2016. GET, pp. 223–231. Springer, Cham (2018). https://doi.org/10.1007/978-3-319-78271-3_18
9. Tramontana, C., Calabrò, F., Cassalia, G., Rizzuto, M.C.: Economic sustainability in the management of archaeological sites: the case of Bova Marina (Reggio Calabria, Italy). In: Calabrò, F., Della Spina, L., Bevilacqua, C. (eds.) ISHT 2018. SIST, vol. 101, pp. 288–297. Springer, Cham (2019). https://doi.org/10.1007/978-3-319-92102-0_31
10. Antoniucci, V., Marella, G.: The influence of building typology on the economic feasibility of urban developments. Int. J. Appl. Eng. Res. **12**(15), 4946–4954 (2017)
11. Della Spina, L.: Scenarios for a sustainable valorisation of cultural landscape as driver of local development. In: Calabrò, F., Della Spina, L., Bevilacqua, C. (eds.) ISHT 2018. SIST, vol. 100, pp. 113–122. Springer, Cham (2019). https://doi.org/10.1007/978-3-319-92099-3_14
12. Nesticò, A., De Mare, G., Granata, F.: Weak and strong compensation for the prioritization of public investments: multidimensional analysis for pools. Sustainability **7**, 16022–16038 (2015). https://doi.org/10.3390/su71215798
13. Della Spina, L.: Historical cultural heritage: decision making process and reuse scenarios for the enhancement of historic buildings. In: Calabrò, F., Della Spina, L., Bevilacqua, C. (eds.) ISHT 2018. SIST, vol. 101, pp. 442–453. Springer, Cham (2019). https://doi.org/10.1007/978-3-319-92102-0_47
14. Manganelli, B., De Mare, G., Nesticò, A.: Using genetic algorithms in the housing market analysis. In: Gervasi, O., et al. (eds.) ICCSA 2015. LNCS, vol. 9157, pp. 36–45. Springer, Cham (2015). https://doi.org/10.1007/978-3-319-21470-2_3
15. Cassalia, G., Tramontana, C., Calabrò, F.: Evaluation approach to the integrated valorization of territorial resources: the case study of the Tyrrhenian area of the metropolitan city of Reggio Calabria. In: Calabrò, F., Della Spina, L., Bevilacqua, C. (eds.) ISHT 2018. SIST, vol. 101, pp. 3–12. Springer, Cham (2019). https://doi.org/10.1007/978-3-319-92102-0_1
16. Nesticò, A., He, S., De Mare, G., Benintendi, R., Maselli, G.: The ALARP principle in the Cost-Benefit analysis for the acceptability of investment risk. Sustainability **10**(12) (2018). Article no. 4668. https://doi.org/10.3390/su10124668
17. Dolores L., Macchiaroli M., De Mare G.: Sponsorship for the sustainability of historical-architectural heritage: application of a model's original test finalized to maximize the profitability of private investors. Sustainability **9**(10) (2017). Article no. 1750. https://doi.org/10.3390/su9101750
18. Nesticò, A., Maselli, G.: Declining discount rate estimate in the long-term economic evaluation of environmental projects. J. Environ. Account. Manage. **8**(1), 93–110 (2020). https://doi.org/10.5890/JEAM.2020.03.007

19. Dolores, L., Macchiaroli, M., De Mare, G.: A model for defining sponsorship fees in public-private bargaining for the rehabilitation of historical-architectural heritage. In: Calabrò, F., Della Spina, L., Bevilacqua, C. (eds.) ISHT 2018. SIST, vol. 101, pp. 484–492. Springer, Cham (2019). https://doi.org/10.1007/978-3-319-92102-0_51
20. Dolores, L., Macchiaroli, M., De Mare, G.: A dynamic model for the financial sustainability of the restoration sponsorship. Sustainability **12**(4) (2020). Article no. 1694. https://doi.org/10.3390/su12041694
21. Nesticò, A., Maselli, G.: A protocol for the estimate of the social rate of time preference: the case studies of Italy and the USA. J. Econ. Stud. **47**(3), 527–545 (2020). https://doi.org/10.1108/JES-02-2019-0081
22. Nesticò, A., Macchiaroli, M., Pipolo, O.: Historic buildings and energetic requalification a model for the selection of technologically advanced interventions. In: Gervasi, O., et al. (eds.) ICCSA 2015. LNCS, vol. 9157, pp. 61–76. Springer, Cham (2015). https://doi.org/10.1007/978-3-319-21470-2_5
23. Nesticò, A., De Mare, G., Fiore, P., Pipolo, O.: A model for the economic evaluation of energetic requalification projects in buildings. a real case application. In: Murgante, B., et al. (eds.) ICCSA 2014. LNCS, vol. 8580, pp. 563–578. Springer, Cham (2014). https://doi.org/10.1007/978-3-319-09129-7_41
24. Fiore, P., Nesticò, A., Macchiaroli, M.: The energy improvement of monumental buildings. An investigation protocol and case studies. Valori e Valutazioni **16**, 45–55 (2016). ISSN: 2036-2404
25. Alagre, H., et al.: Performance Indicators for Water Supply Services, 3rd edn. IWA Publishing, London (2016)
26. Saaty, T.L.: The Analytic Hierarchy Process. McGraw-Hill, New York (1980)
27. Saaty, T.L.: Decision making with the analytic hierarchy process. Int. J. Serv. Sci. **1**(1), 83–98 (2008)
28. ARERA: Relazione Annuale sullo stato dei servizi e sull'attività svolta, vol. I – Stato dei servizi (2017)
29. Marangoni, A.: Le local italiane e il settore idrico. Gli investimenti e le performance delle imprese. In: Conferenza Nazionale sulla Regolazione dei Servizi Idrici. Althesys, Milano (2013)