

Top-Down Parsing Error Correction Applied to Part of Speech Tagging

Ygor Henrique de Paula Barros Baêta, Alexandre Bittencourt Pigozzo, and Carolina Ribeiro Xavier(✉)

Department of Computer Science, Universidade Federal de São João del Rei - UFSJ, São João del Rei, Brazil
ygorthemoster@gmail.com,
{alexandre.pigozzo,carolinaxavier}@ufsj.edu.br

Abstract. Natural Language Processing (NLP) applications are growing in popularity and importance, all of these applications rely upon the basic steps of tokenization, stemming and Part-of-Speech tagging (POS), and while those steps already work really well on English texts, the same cannot be said for every language. This paper investigates the use of techniques developed to be used as error correction in compilers as a means to improve Part-of-Speech tagging, specifically in Brazilian Portuguese.

Keywords: Natural Language Processing · Top-down parsing · POS tagging · Lexical analysis · Error correction

1 Introduction

Language is an ever evolving complex system, it's a driving force for technology and it's always changing to adapt the medium we communicate on, for example *Ogham* which evolved to be written on the corner of a stone [1]. When thinking of language evolution most think about ancient times with proto-languages and the creation of alphabets like Hangul [2], but some current languages are evolving and changing because of popular use, politics or other reasons, like as recently as 2009 Portuguese has had an orthographic accord in order to reduce the difference between it's variants [3].

Since the creation of the internet, language started evolving faster with new words invented to communicate about it, the increased use of abbreviations in order to comply with character limits, and the ever growing catalogue of emoji [4]. The influence of these neologisms and symbols is indisputable, for example in 2015 Oxford's word of the year was 😂 (Face With Tears of Joy) [5].

Natural Language Processing (*NLP*) is an interdisciplinary field of computer science and linguistics which studies techniques for representing and comprehending humans natural communication with computers [6]. *NLP* has many applications in current society such as Sentiment Analysis [7], Machine Translation [8] and Text Classification [9].

© Springer Nature Switzerland AG 2020
O. Gervasi et al. (Eds.): ICCSA 2020, LNCS 12249, pp. 650–662, 2020.
https://doi.org/10.1007/978-3-030-58799-4_47

In the classical approach to NLP, the process is subdivided in steps, that mirror how we humans classify sentences, these steps can be thought as being divided in the comprehension of the syntax, pragmatics and discourse [10], and generally are a combination of Tokenization, Stemming, Part-of-Speech Tagging, Stop-Word Removal, Dependency Parsing, Named Entity Recognition and Co-referencing.

NLP is growing in importance as human-machine interactions are becoming more common in everyday life, chat-bots and voice user interfaces are rising in usage over the last few years, but most of the problems for the users arise when the machine cannot correctly understand what is being told to them [11].

Considering this, it is of utmost importance to focus on furthering the comprehension of everyday expressions, and to make it possible to adapt to local dialects and the evolution of languages.

In English, NLP is an almost solved problem, with algorithms that have more than 97% Accuracy [12], being the main language of the Internet, there are many annotated corpus to train and test algorithms and some very well developed and tested frameworks for the basic steps [13,14].

This accuracy can fall drastically when dealing with non-English texts, be it from the lack of tools or the different, sometimes unique, grammar or syntax, for example the case of Croatian [15] as a very inflective language, Arabic [16] with challenges regarding it's impure abjad script, German [17] where word agglutination makes stemming a very hard process or Portuguese [18] with a complex structure characteristic of Latin derived languages.

Other problems arise when you deal with dialects and variants, different spellings can confuse some algorithms and difficult stemming, some language variants even use different syntax and grammar rules [19].

Portuguese is a language spoken in Portugal, Brazil and some parts of Africa, it is of the Western Romance Family that evolved from Latin [20] and uses the standard Latin alphabet with the addition of *Ç*. It is a language with a complex grammar [21] and many regional variants.

In Portuguese the main differences in spelling and grammar come from the macro variants of Brazilian Portuguese and European Portuguese. Even with the recent orthographic accord [3] the informal voice is still very different and causes confusion between it's speakers.

The language has a hierarchical structure for it's sentence creation, a sentence (or *frase*) is the basic syntactical construct of the language, and can or cannot be a clause (or *oração*) or a period (or *periodo*) containing many clauses. The word order is not so dissimilar from English and almost always follows the order Subject → Verb → Object [21]. Within this context, given a phrase in Brazilian Portuguese with unknown words or symbols the proposal of this work is to correctly tag them according to their part of speech. This will be done by applying a top down parser known as Packrat [22], modified to accept insertions and/or exclusions in the input. This parser is made to accept the structure of Portuguese.

To accomplish this task, a tool capable of processing any given Context Free Grammar (CFG) and act as a compiler for the language described was created. During the compilation process, the tool can apply error correction for these grammars. Finally, a grammar that describes Brazilian Portuguese rules for sentence formation was developed and described using the notation of the tool for testing of the technique.

While not the main objective, the developed compiler could be used as a general purpose compiler for prototyping programming languages, some functionality was added to support the generation of an Abstract Syntax Tree (*AST*) with functional nodes and to enforce Semantic rules and restrictions.

The project of this tool can be divided in three steps, first defining a notation able to define the grammar and it's productions, terminals, non-terminals, initial production, ignored characters, as well as different options for the compilers. The second task is implementing the parser itself, and finally the definition of a template of nodes for an AST that can be extended to add functionality.

2 Compilers and Parsing

A parser is a software able to comprehend and most likely translate commands from a origin language to a target language [23]. Compilers and Interpreters are a special kind of parser, able to transform one programming language into machine code. Interpreters are also a special type of parser, able to receive a program written in a programming language and execute it.

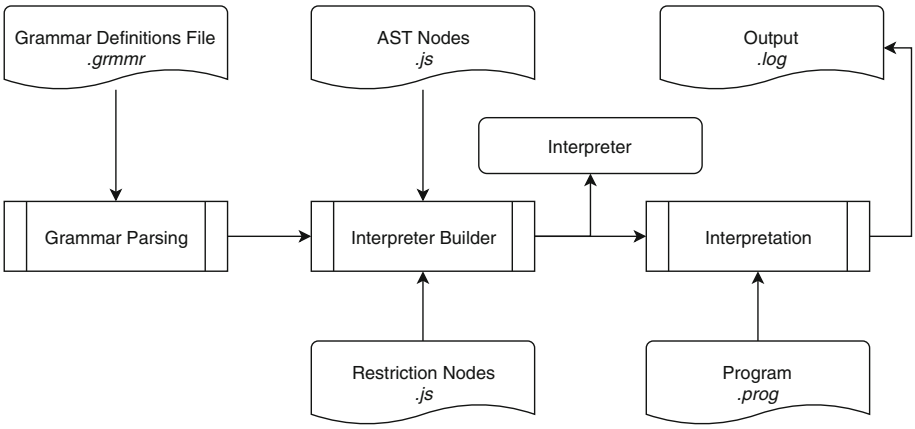

Fig. 1. General flow of the Interpreter

The tool developed in this paper works as a generic compiler, able to receive a programming language definition, some functional nodes and an input program and be able to interpret it. The general flow of the tool can be seen on Fig. 1 and will be further discussed in Sect. 4.1.

2.1 BNF Notation

In the early days of computer programming, punch cards were used to pass instructions to computers and some of these cards were written manually. To facilitate readability people started writing notes on the cards [24].

When programming languages and compilers started being researched, it was necessary to provide a clear description of a programming language structure, function and syntax. To this end, in 1958, John Backus proposed a metalanguage to describe ALGOL, his new programming language [25]. Since then, the Backus-Naur Form (BNF) became the main form used to describe programming languages.

The BNF consists of several rules written in the form: $P ::= E$ where P represents a non-terminal grammar and E is composed of terminals and non-terminals. Each of these rules indicates that the expression on the right is derived from the non-terminal on the left.

For identifying terminals the BNF represents identifiers Between $\langle$ and $\rangle$, double quotes are used to represent terminals, and for shortening the overall length of the representation the character—to indicate alternative expressions. An example is the grammar defined in (1) which defines mathematical operations for integers including the four basic operations (+, −, *, /) and the use of parentheses:

$$
\begin{aligned}
\mathit{expression} &::= \langle \mathit{addend} \rangle \text{“}+\text{”} \langle \mathit{expression} \rangle \\
&\quad \mid \langle \mathit{addend} \rangle \text{“}-\text{”} \langle \mathit{expression} \rangle \\
&\quad \mid \langle \mathit{addend} \rangle \\
\mathit{addend} &::= \langle \mathit{factor} \rangle \text{“}\times\text{”} \langle \mathit{addend} \rangle \\
&\quad \mid \langle \mathit{factor} \rangle \text{“}\div\text{”} \langle \mathit{addend} \rangle \\
&\quad \mid \langle \mathit{factor} \rangle \\
\mathit{factor} &::= \text{“(”} \langle \mathit{expression} \rangle \text{“)”} \\
&\quad \mid \langle \mathit{integer} \rangle \\
\mathit{integer} &::= \langle \mathit{digit} \rangle \langle \mathit{integer} \rangle \\
&\quad \mid \langle \mathit{digit} \rangle \\
\mathit{digit} &::= \text{“0”} \mid \text{“1”} \mid \text{“2”} \mid \text{“3”} \mid \text{“4”} \mid \text{“5”} \mid \text{“6”} \mid \text{“7”} \mid \text{“8”} \mid \text{“9”}
\end{aligned}
\tag{1}
$$

2.2 Compilers and Interpreters Analysis Steps

A Compiler can be broken down in three main steps, Analysis, Optimisation and Synthesis, and each of these steps can be further broken down. The synthesis step is responsible for generating the machine code, and the optimisation step is responsible for guaranteeing the generation of efficient code. The Analysis step is subdivided in Lexical, Syntactic and Semantic Analysis and is responsible for comprehending the source code and generating a representation of it that the computer can understand [23].

Lexical Analysis. The first analysis step, the lexical analysis, aims to translate the strings that make up the source code into a token array, where each token represents a meaningful unit, for example identifiers or operators. This analysis is done so that the next steps of the compiler can ignore string processing, thus simplifying the process.

This step is also used in several other processes including NLP, this means it is a highly optimised process, tha has known algorithms [10,23]. Generally it's implemented as a finite state automata or as a series of regular expression matches.

Syntactic Analysis. After the lexical analysis, the compiler performs the syntactic analysis, this analysis validates the grammatically the source file. This validation is done based on rules defined formally, for example in the notation described in Sect. 2.1 [26].

The input of this step is a token array generated at the lexical analysis, and it's objective is to verify whether it can be generated by the source language grammar. In this step, it is expected syntax errors to be found and reported. For this a derivation tree is generated that connects the final array to the initial symbol in the grammar, Fig. 2 shows an example of such tree for the grammar described in Sect. 2.1 and the expression 10 + 2 * 3.

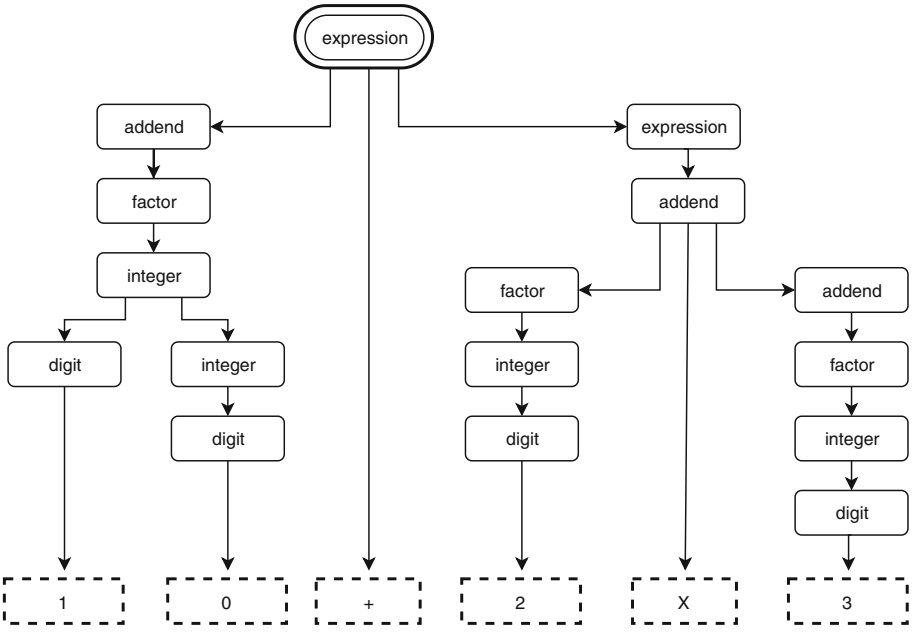

Fig. 2. Derivation of the expression 10 + 2 * 3

One algorithm that can be used to make this analysis step is Packrat's Algorithm, a backtracking based algorithm that uses memory to reduce the complexity of doing a full search through the grammar [22]. It is based on a recursive descent algorithm that transforms each derivation in it's own function call, and adds a *match* function that is responsible for finding the terminals, the general match function is described in Algorithm 1.

Algorithm 1: match()

```
Data: Expected Token : T, Token Array : arr
Result: True or False
if arr.CurrentPosition == T then
    arr.next();
    return True;
else
    return False;
```

Semantic Analysis. The last step in the analysis is the semantic analysis, with the objective to give meaning to the derivation generated in the last step. This step validates grammatically if the source code is a valid code, and checks typing, variable declaration, scoping and many other language features.

At the end of this step, an Intermediate Representation is generated, this can be in the form of a three address code, a code graph or an Abstract Syntax Tree (AST). In the AST case, the tree can be interpreted from the root by executing the commands described in each of these nodes.

There are ways for converting a Derivation Tree to an AST if you are able to write one-to-one relationships and every restriction as simple rules, regarding the children or direct parent of each of the nodes [23].

3 Natural Language Processing Concepts

As discussed in Sect. 1 NLP is an interdisciplinary field of computer science and linguistics. Understanding these concepts is essential to comprehending how the method works. Each steps of the process are cumulative and build upon the result of previous steps. Fig. 3 represents the general flow of the process.

Tokenization is a very similar process to lexical analysis described in Sect. 2.2 it breaks up the words on the sentence. Stemming is responsible for reducing words back to it's root form. POS tagging is the step this paper is interested in, and will be discussed in Sect. 3.1. Stop word removal is used to reduce the load of the next steps, removing common words that do not change the final outcome. The next steps collectively deal with the intricacies between two or more phrases, connecting them and marking which words references people, places or other important things.

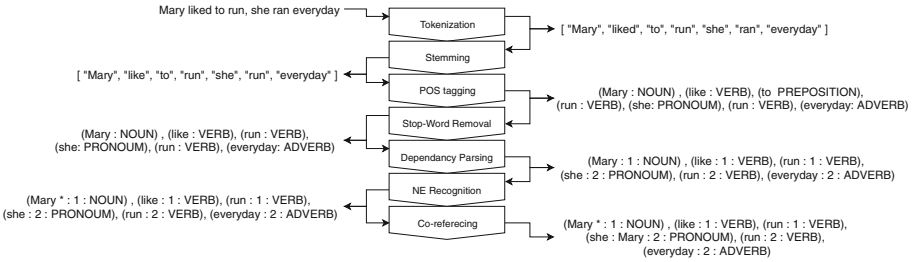

Fig. 3. General flow of NLP

3.1 POS Tagging

Also called Word Categorisation, the process consists in the categorisation of the words based on its function on the sentence. This process is a fundamental part of the analysis of natural language computationally.

In Portuguese, the word classes are: *substantivo, verbo, adjetivo, pronome, artigo, numeral, preposição, conjunção, interjeição and advérbio* [21]. A tagger can also add extra information to each class, like a verb conjugation or it's inflection.

Currently there are various tagging techniques using methods of different computational areas, the main ones being based on Bayesian networks through the Markov model, neural networks, support-vector machines and Grammars defined by specialists.

Each one has a distinct advantages and disadvantages, for example the grammar based ones are simple to implement and efficient, but costly to initially create due to the necessity of an expert to create the grammar.

4 Methodology

The development was split into two parts: the interpreter and the grammar. Each of these parts works individually and were connected to achieve the error-correction.

To test the error correction, a Portuguese corpus based on the 2014 world cup hashtag used in conjunction with a basic sentiment analysis tool was used to verify if the POS correction would bring improved results to a real-world application. The data-set consists of a previously available data-set [27] and some tweets collected using the Twitter API. The added tweets were collected to increase variety in the data.

To understand the technique, we must understand that an error in the derivation process is a word that was tagged wrongly. These errors can happen in three forms: a word was added to the phrase when, according to formal rules, it shouldn't; an word was omitted causing a gap; or a word used had either no common part-of-speech or was used in a way that is not formally accepted, for example as a slang.

Two applications were tested with and without error-correcting to test whether they would improve for both of the tests. The correction was focused on substituting emojis with equivalent words using the correct tag. For this, a table was added correlating each emoji to a word in a given part of speech. In Table 1 a line of this table can be seen.

Table 1. Substitutions for an emoji

Emoji	Substantive	Verb	Adjective	Interjection	Adverb
😂	Risada	Rir	Engraçado	Haha!	Rindo

According to the table, if for example the emoji 😂 appears as a substantive it will be replaced by *Risada*, which means laughter. Another thing to note is that not every emoji can appear as every Part-of-Speech, for example, there is no occurrence of this emoji as a pronoun.

The first application was sentiment analysis where it was expected that this correction meant that each word was interpreted by the sentiment analysis as a meaningful corresponding word, and not skipped by the algorithm. Another test was made using a simple translator after substituting an emoji the same way. After the translation, the emoji was substituted back resulting in a phrase was the symbol exerted the same function. Both tests result will be discussed in Sect. 5.

4.1 The Interpreter

Built using Node.js, the interpreter uses *Packrat*'s algorithm to compile a grammar definition file and construct the functions used to interpret the input file. It is defined by a BNF notation described in Sect. 2.1 with the keyword ROOT used to define the grammar's initial rule, and with the node being represented by that rule in parenthesis to represent the correspondence to the AST. Each of these nodes can be extended or overwritten to add new functionalities to the interpreter.

Figure 1 in Sect. 2 shows the flow in three basic steps Grammar Parsing, Interpret Builder and Interpretation. while in Grammar Parsing the interpreter reads a *.grmmr* file containing the definition of the language that will be interpreted. It is defined by a BNF notation described in Sect. 2.1 with the keyword **ROOT** used to define the grammar's initial rule, and with the node being represented by that rule in parenthesis to represent the correspondence to the AST.

After reading the grammar it is optimized to be used in the algorithm, recursion is removed and functions are built using code inflection to represent the rules. The final step is done by simply calling the function defined as the initial derivation.

4.2 The Grammar

The efficacy of the algorithm depends on a good representation of the Portuguese Language as a grammar. But as it is discussed in the literature [28] Portuguese grammar, especially the Brazilian variant presents some nuances that make it hard to work within computational applications.

Initially, the base grammar was developed with the help of a book [21], but this proved to be a challenge and it meant another approach was needed. The version used in this paper is a combination of that work and a CFG inductor applied to an annotated corpus called MAC-MORPHO [29].

The induction works by going through the annotated base and generating a new derivation rule that represents the most common pair of occurrences. The algorithm then replaces this pairs with the new non-terminal and repeats. Because of this, all the generated rules follow the form $A- > BC$ where A is the new rule and B and C are either terminals or non-terminals. A side note to this algorithm is that it allows for a quick transformation of any generated CFG to the Chomsky Normal Form. Some rules of the CFG were then named to better represent what they meant in the Portuguese grammar.

5 Results

The accuracy of the sentiment analysis algorithm was calculated before and after the correction, described in Sect. 4 with results shown in Table 2. Accuracy represents the percentage of tweets that were correctly analyzed. Each of the instances represents a part of the evenly split full data set. All parts were subject to the same algorithm and represent about 2000 tweets.

The sentiment analysis algorithms use each word to calculate a score ranging from −1.0 to 1.0. A tweet that is 100% negative is −1.0 and a tweet that is 100% positive is 1.0. A tweet with a score of 0.0 means it is neutral. The accuracy was calculated as the absolute error concerning the total possible error, as given by the formula:

$$1.0 - \frac{\Delta score}{2.0}$$

In this formula, a tweet that should have been classified as 1.0 but was given the score of −1.0 has an accuracy of 0%.

As seen, the correction improved the results by an average of about 3%. These results show us that trying to preprocess some symbolic information like emoticons, emoji, or *slangs* can help to get better results with NLP algorithms. This seems obvious but most processes drop these clues to keep the simplicity of implementation.

Notably, the most affected examples were the ones where the words were positive but the emoji was negative, being used as a means of sarcasm, for example, the tweet in Fig. 4: "*Brasil ta jogando pacas* 💩" which roughly translates to "💩

Table 2. Accuracy of sentiment analysis before (Acc_0) and after (Acc) POS correction

Instance	Acc_0	Acc	Gain
1	91.609%	95.363%	4.10%
2	91.642%	95.669%	4.39%
3	92.056%	92.709%	0.71%
4	91.675%	95.406%	4.07%
5	91.768%	93.223%	1.59%
6	92.375%	93.131%	0.82%
7	91.070%	91.898%	0.91%
8	91.884%	92.062%	0.19%
9	92.465%	96.982%	4.88%
10	91.759%	96.678%	5.36%
Avg	91.572%	94.312%	2.99%



Fig. 4. Example of tweet that was previously wrongly classified

Brazil is playing so well" was previously classified as positive but is now correctly classified as negative, in this example when the emoji was classified as an interjection, and substituted for booing which changed the outcome.

In this same example, the word "*pacas*", used as a slang, was also affected by the algorithm, being previously tagged by the dictionary as a noun (an animal) it was later categorized as an adverb (meaning a lot/well).

The best results came from machine translation were word order is a known problem [30]. By shifting the emojis into words and back into emojis the sentences were more understandable and human-like than their counterparts. This mainly shows up in sentences with subject-object-verb order, where the verb was substituted, for example in Fig. 5 "*Esse Brasil vai me \ do coração*" which was previously translated keeping the order as "*This Brazil will me \ of the heart*" by the naive algorithm now is translated into proper subject-verb-object order in English "*This Brazil will \ me from the heart*".



Fig. 5. Example of tweet that was previously wrongly translated

6 Conclusion

This paper shows it is possible to apply error correction to POS tagging and increase the accuracy of later steps in NLP processing. Two tools were also developed that can become the basis of future work.

The grammar can be improved and used in many works regarding the Portuguese language. Future work also includes trying to use a grammar inductor to find out if it is possible to generate a 100% complete grammar of the language. This grammar can be used in conjunction with already existing machine learning processes to help them learn process Portuguese.

This complete grammar can also be used outside Computer Science to study its structure formally. This formal understanding is the basis of formal semantics that started with Richard Montague.

The compiler itself is a tool able to handle multiple languages, developing it further and adding new features such as the ability to load a pre-parsed grammar, the option to use it as a transpiler or expanding its repertoire of pre-existing nodes brings a new prototyping tool in compiler design. There is a multitude of uses for a flexible parser in many fields of Computer Science, and the developed one could be used as a basis for a more powerful tool.

Finally, the technique used although not entirely new enables a better understanding for future developments in the field of Natural Language Processing for Brazilian Portuguese. Finding which algorithms Error correction increases the accuracy of leads to new applications which demand this level of accuracy.

References

1. MacNeill, J.: Notes on the distribution, history, grammar, and import of the Irish Ogham inscriptions. In: Proceedings of the Royal Irish Academy. Section C: Archaeology, Celtic Studies, History, Linguistics, Literature, vol. 27, pp. 329–370 (1908)
2. Kim-Renaud, Y.K.: The Korean Alphabet: Its History and Structure. University of Hawaii Press, Honolulu (1997)
3. Zúquete, J.P.: Beyond reform: the orthographic accord and the future of the Portuguese language: South European atlas. South Eur. Soc. Politics **13**(4), 495–506 (2008)

4. Herring, S.C.: Language and the internet. In: The International Encyclopedia of Communication (2008)
5. Steinmetz, K.: Oxford's 2015 word of the year is this emoji (2015). https://time.com/4114886/oxford-word-of-the-year-2015-emoji/
6. Bates, M.: Models of natural language understanding. Proc. Nat. Acad. Sci. **92**, 9977–9982 (1995)
7. Rocha, L., et al.: SACI: sentiment analysis by collective inspection on social media content. J. Web Semant. **34**, 27–39 (2015)
8. Gachot, D.A., Lange, E., Yang, J.: The SYSTRAN NLP browser: an application of machine translation technology in cross-language information retrieval. In: Grefenstette, G. (ed.) Cross-Language Information Retrieval. INRE, vol. 2, pp. 105–118. Springer, Boston (1998). https://doi.org/10.1007/978-1-4615-5661-9_9
9. Howard, J., Ruder, S.: Universal language model fine-tuning for text classification. CoRR abs/1801.06146 (2018). http://arxiv.org/abs/1801.06146
10. Indurkhya, N., Damerau, F.J.: Handbook of Natural Language Processing, 2nd edn. Taylor & Francis, Abingdon-on-Thames (2010)
11. BRN.AI, B.: Chatbot report 2019: Global trends and analysis, April 2019. https://chatbotsmagazine.com/chatbot-report-2019-global-trends-and-analysis-a487afec05b
12. Manning, C.D.: Part-of-speech tagging from 97% to 100%: is it time for some linguistics? In: Gelbukh, A.F. (ed.) CICLing 2011. LNCS, vol. 6608, pp. 171–189. Springer, Heidelberg (2011). https://doi.org/10.1007/978-3-642-19400-9_14
13. Bird, S., Klein, E., Loper, E.: Natural Language Processing with Python. O'reilly, Newton (2009)
14. Loria, S.: Textblob: Simplified text processing - textblob documentation (2018). https://textblob.readthedocs.io/en/dev/
15. Agić, Ž., Ljubešić, N., Danijela, M.: Lemmatization and morphosyntactic tagging of Croatian and Serbian. In: Proceedings of the 4th Biennial International Workshop on Balto-Slavic Natural Language Processing, pp. 48–57 (2013). https://www.aclweb.org/anthology/W13-2408
16. Farghaly, A., Shaalan, K.: Arabic natural language processing. ACM Trans. Asian Lang. Inf. Process. **8**, 1–22 (2009)
17. Baeza-Yates, R.: Challenges in the interaction of information retrieval and natural language processing. In: Gelbukh, A. (ed.) CICLing 2004. LNCS, vol. 2945, pp. 445–456. Springer, Heidelberg (2004). https://doi.org/10.1007/978-3-540-24630-5_55
18. de Barbosa, C.R.S.C., Cury, D., de Castilho, J.M.V., Souza, C.D.R.: Defining a lexicalized context-free grammar for a subdomain of Portuguese language. In: Proceedings of the Sixth International Workshop on Tree Adjoining Grammar and Related Frameworks (TAG+ 6), pp. 74–79 (2002)
19. Görski, E.M., Coelho, I.L.: Variação linguística e ensino de gramática. In: Working Papers em Lingüística, vol. 10, February 2009
20. de Língua Portuguesa, C.D.P: CPLP - comunidade dos países de língua portuguesa (2019). http://www.cplp.org
21. Bechara, E.: Moderna Gramática Portuguesa. Editora Nova Fronteira, Rio de Janeiro (2015)
22. Ford, B.: Packrat parsing: a practical linear-time algorithm with backtracking. Ph.D. thesis, Massachusetts Institute of Technology (2002)
23. Grune, D., Reeuwijk, K.V., Bal, H.E., Jacobs, C.J.H., Langendoen, K.G.: Modern Compiler Design. Springer, Heidelberg (2016). https://doi.org/10.1007/978-1-4614-4699-6

24. Dale, F.: Programming with punched cards. In: Programming with Punched Cards (2005)
25. Backus, J.W.: Revised report on the algorithmic language ALGOL 60. Comput. J. **5**, 349–367 (1963)
26. Aho, A.V., Ullman, J.D.: Principles of Compiler Design. Narosa Publishing, House, New Delhi (1999)
27. Moraes, S.M., Manssour, I.H., Silveira, M.S.: 7x1pt: Um corpus extraído do twitter para análise de sentimentos em língua Portuguesa. In: Proceedings of Symposium in Information and Human Language Technology, November 2015
28. da Silva, B.C.D.: O estudo lingüístico computacional da linguagem. Letras de Hoje **41**(2), 103–138 (2006)
29. Fonseca, E.R., Rosa, J.L.G.: Mac-morpho revisited: towards robust part-of-speech tagging. In: Proceedings of the 9th Brazilian Symposium in Information and Human Language Technology (2013)
30. Barreiro, A., Ranchhod, E.: Machine translation challenges for Portuguese. Linguisticæ Investigationes **28**(1), 3–18 (2005)