

A Web Framework for Online Peer Tutoring Application in a Smart Campus

David Akobe[1], Segun I. Popoola[1,2(✉)], Aderemi A. Atayero[1], Olasunkanmi F. Oseni[3], and Sanjay Misra[1]

[1] IoT-Enabled Smart and Connected Communities (SmartCU) Research Cluster, Covenant University, Ota, Nigeria
david.akobe@stu.cu.edu.ng, atayero@covenantuniversity.edu.ng
[2] Department of Engineering, Manchester Metropolitan University, Manchester M1 5GD, UK
segun.i.popoola@stu.mmu.ac.uk
[3] Department of Electronic and Electrical Engineering, Ladoke Akintola University of Technology, Ogbomoso, Nigeria
ooseni@lautech.edu.ng

Abstract. Peer tutoring is a unique and efficient method of teaching that has been widely investigated. Related works in the literature ranges from cross-age peer tutoring, peer tutoring for the disabled, reciprocal peer tutoring, to peer tutoring for children. One unique method that has been scarcely documented, however, is peer tutoring with the aid of the Internet. In this paper, therefore, a web framework is proposed for online peer tutoring application in a smart campus. The peer tutoring web application identifies two key target users: the tutor and the tutee. The tutors will help in teaching other students; they are responsible for accepting requests from tutees and in turn holding tutoring sessions for the tutees. They also have the responsibility of uploading important documents to the platform which are accessible to tutees. On the other hand, the tutees search for the tutors with prowess in their course of need and make a request for a tutoring session. They also have access to the materials uploaded by the tutors. The peer tutoring web application is designed in such a way that the web browser communicates with the web server by making Hyper Text Transfer Protocol (HTTP) request to the server. The proposed framework consists of the client-side and the server-side which are connected by the web browser. In essence, web-based peer tutoring application will go a long way in improving students' academic performance in a more efficient manner.

Keywords: Peer tutoring · Web application · E-learning · Smart campus

1 Introduction

Peer tutoring is a unique teaching technique; it consists of two or more students working together and teaching each other rather than learning from a teacher's

© Springer Nature Switzerland AG 2019
S. Misra et al. (Eds.): ICCSA 2019, LNCS 11623, pp. 316–326, 2019.
https://doi.org/10.1007/978-3-030-24308-1_26

direct instruction [1]. In a world where the role of Information and Communication Technology (ICT) in the delivery of instruction in a university has been truly explosive, peer tutoring provides a unique academic solution for poor performing students as it involves the acquisition of knowledge or skill through active helping and supporting among student equals or matched companions [2,3]. Peer tutoring ensures that every student is carried along at their own pace [4]. It is an adept method that not only benefits students who want to achieve better grades in school, but it is also helpful for higher level achieving or skilled students [5]. It provides an effective and efficient way to improve social and conduct aptitudes such as communication and sharing amongst classmates and pairs, which are all critical proficiency.

Peer tutoring has also been said to improve student's self-esteem [6]. Proper implementation of the peer tutoring framework in classrooms will ensure that teachers are able to individualize instruction for each student, giving each student in the class-room the opportunity to be actively engaged in learning at the same time [1]. Peer tutoring can be classified into various forms: class-wide peer tutoring, cross-age peer tutoring [7], peer tutoring implemented with the aid of the Internet [8], and reciprocal peer tutoring which involves reciprocity and mutuality [9]. Peer tutoring has a lengthy history of success in classrooms [10], and it is an effective strategy which is successful in improving student academic performance [7].

Peer tutoring is a unique and efficient method of teaching that has been widely investigated. In this paper, the concept of peer tutoring is well explained with the hope of applying it in a smart campus environment. Then, various approaches employed in implementing peer tutoring in the literature are discussed under the following categories: class-wide; cross-age; reciprocal; and Internet-based peer tutoring approaches. Finally, a web framework is proposed for online peer tutoring application in a smart campus.

2 The Concept of Peer Tutoring

Peer tutoring involves two pupils: a tutor and a tutee. The students educate one another usually in minute groups. These gatherings are cautiously sorted out and monitored by an educator or coordinator in a classroom setting. Peer tutoring is not just a viable and effective method for enhancing both the guide's and tutees' academic performance; it likewise empowers them to be free and independent. It, furthermore, emancipates the teachers, permitting them the opportunity to assess the peer tutoring process in the class [11]. A broad definition given in [12] stated that peer tutoring "involves people from similar social groupings who are not professional teachers helping each other to learn and learning themselves by teaching". Peer tutoring is a dynamic, enjoyable strategy that empowers interests and it offers an elective, yet powerful, method for learning [13].

According to Topping [14], peer mentoring is an old practice that dates back to Greece. A crude definition for it at that time is one in which the peer tutor was considered as a surrogate educator in the learning transmission process. It

was later under-stood that the communication between companions was fairly unique relative to the on between an instructor and student. Consequently, a superior definition was coined out stating that it is the process in which highly gifted students helped other students who were inadequate in specific proficiency. This interaction can, however, be coordinated by an instructor. Topping [14] identified that the evolution of peer tutoring over the years made it more difficult to find a suitable definition for the process. The previous definitions were vague explanations of what the whole process entailed. He, therefore, concocted a fairly wide definition of the peer mentoring process featured in [12]. His definition, however, failed to take cognizance of the benefits that the process provides to the tutor and tutee. Topping categorically structured peer tutoring into ten proportions, of which three important dimensions pertinent to this study are listed namely: (a) Year of study – The author [12] distinguished that guides and tutees could either be the same or different year students; (b) Role continuity - He stated that the tutor's and tutee's roles should be interchangeable, and not immutable. He suggested that there be a form of reciprocity and mutuality in the tutoring process; (c) Tutor qualities - It was realized that the generalization that the tutors were expected to be the best students in class.

3 Taxonomy of Peer Tutoring Methodologies

3.1 Class-Wide Peer Tutoring

Class-wide peer tutoring is a form of peer tutoring that has been implemented in various educational systems. It is structured in a way that allows students to form pairs or groups in a classroom setting. In each pair, one student assumes the role of a tutor while the other student assumes the role of a tutee. Incentives are usually included as a way to further motivate students to perform excellently as they assume their roles [16].

Hall et al. [15] implemented a class mentoring framework at the Juniper Gardens Youngster's venture to enhance the guidance for minority, distraught, and leaning-impaired kids. The authors proposed three principles in the implementation of the class-wide peer tutoring framework: (a) the "opportunity to respond concept"; (b) successive connection between educator and classroom precursors; and (c) attitude scrutiny. The first principle used was the "opportunity to respond concept". The requirement for this idea emerged because of the absence of active participation by kids who were tasked with the instructor's exercise from the educational modules, amid an oral cognizance class [17]. Due to this limitation in the conventional teaching system, the authors identified a vital condition for scholarly accomplishment which they defined as a course of action in which there was a successive connection among educator and classroom precursors and scholar acknowledgement. This turned out to be the core of the "opportunity to respond" model. The authors demonstrated the efficacy of this model by moving the tykes to another classroom for learning- impaired students. In this case, six minutes of oral perusing practice was conducted every day. This resulted in an increase of comprehension reading speed by 31.5 words per minute

in addition to the original 15.2 words per minute. On the other hand, error rate diminished by 7.4 blunder words from an original 9.8 blunder words per minute. The authors also took note of the issue in growing the framework as identified by Elliott and Delquadri [16]. This was reported as a way of accomplishing similar impact in customary classrooms that had a greater multi-faced nature because of the heterogeneity of pupil's aptitude levels and expansive numbers. They further provided a suitable solution to this loophole by enabling friends administer to their colleagues reacting. Every youngster in a class therefore could get 10 min of direct practice time on each key instructional ability, regardless of whether it was math, vocabulary, oral perusing, or perception. Another principle that was used in the class-wide mentoring framework involved selection of scholarly target practices and aptitudes that instructors would use to decide a youngster's advancement.

Delquadri et al. [17] discovered that in choosing educator assigned practices for guidance, there was a high probability that those practices would be kept by the instructional environment and turn out to be progressively utilitarian for the tyke [17]. The final principle employed by the authors was that of attitude scrutiny. The authors structured the tutoring scheme in such a way that the instructor could deliberately audit the tyke's execution gains. This afforded the instructor the chance to give understudy acknowledgement and acclaim, separately, without method, and hence enhanced the kid's self-esteem without the instructor knowing. In conclusion, the authors noted that the class wide peer mentoring strategies are still undergoing changes and development by various researchers. However, the strategy has proven to be a successful instructional technique for enhancing student's scholastic fulfillment.

Kamps et al. [18] also implemented a class-wide peer tutoring scheme at the Juniper Gardens children's venture. This involved students with autism. Three students with autism paired with three other non-disabled students participated in the class-wide peer tutoring scheme set up by the authors. The main aim of the tutoring scheme was to improve the social skills of the students with autism whilst improving the oral fluency, perusing skills, and overall academic performance of the students. The authors discovered that the class-wide peer tutoring scheme was indeed an adequate and profitable procedure for improving the aforementioned skills in students. The students with autism as well as the non-disable tutors also showed a welcome gesture towards this approach and expressed their intent to participate in the scheme yet again.

3.2 Cross-Age Peer Tutoring

It is no small fact that peer coaching or tutoring is an adept instructional technique that has the advantage of individualizing content based on pupils needs, while taking into account broad input and ensuring immense assignment commitment [19]. An impeccable definition of peer tutoring would be an understudy intervened instructional methodology, organized so that one understudy is in charge of giving guidance to another understudy in a particular area of expertise [20]. It should be noted that the two understudies would have a mutual

connection such as being within similar age brackets. The practice of clarifying ideas and realities to other students is shown to help mentors create and fortify their own aptitudes [21]. Cross-age peer coaching, however, nullifies the mutual connection by making use of a more seasoned mentor who shows a more youthful tutee [22].

Greene et al. [23] applied this form on peer tutoring with fluency-based instruction approaches to facilitate increment in science aptitudes of students going to class-rooms in distraught areas. Forty-four members formed the sample size. The members chosen were between the ages of eight and twelve. A lead experimenter backed by a second teacher educated the members. Both experimenter and the extra teacher were ace level students finishing college post-graduates' studies in Applied behavior analysis. The experimenter gave instructional courses in recurrence-building and mentoring mediation to the second teacher before and after the intercession period. Cheat sheets which comprised of focused math problems were provided to the second teacher with the answers to the math problems written in reverse on the sheet. The sheets were flashed and the tutee was required to see the math truth on the sheet and afterwards state the appropriate response that was imprinted on the switch of the card. The exploratory gatherings by the authors indicated the capacity of students to advance through the meditation with many accomplishing a decent number of familiarity points amid an 8-week intercession period. Huge contrast on mean post-test scores between the trial and control aggregate were found for the Mathematics familiarity subset and on familiarity with target math problems. This distinction turned out to be concurrent with a past research demonstrating the viability of cross-age peer coaching [24] and familiarity base intercession [25] to build familiarity with science skills. The authors were able to expand on past research on cross age peer tutoring, demonstrating that it is in reality and affecting strategy for enhancing arithmetic aptitudes of students. The conclusion was that although there might be constrained advantages for coaches or tutors, the utilization of cross-age peer coaching and familiarity-based guidance has huge advantages for more youthful tutees.

3.3 Reciprocal Peer Tutoring

Peer mentoring can either involve reciprocity and mutuality or not [9]. Mutuality is a critical component of peer mentoring that prevents tutee dependency and absolute tutor superiority. It also encourages exchange of information between tutee and tutor [25]. Reciprocity helps engender social interactions, and promotes characteristics such as participation, cooperation and solidarity [26]. Reciprocal peer tutoring is, therefore, a form of peer tutoring that employs the two aforementioned unique components.

Miravet et al. [9] investigated the effects of this form of companion mentoring in a school setting. The sample size was a total of 85 students enlisted in a predefined course to guide and mentor others. A non-exploratory descriptive design which en-tailed no purposeful control of the variable and ensured that observations were carried out in a natural habitat. A discussion group was formed

with only 39 participants out of the total 85. The discussion group was formed to enable participants discuss the effects, advantages, and argue for or against reciprocal peer tutoring [27]. Five other separate groups engaged in discussions centered around self-concept and attitudes of solidarity. Data were gathered from the various discussion groups and MaxQda 10 was the software program used to structure the descriptive analysis of the gathered data. The discourse that took place amongst group members revealed that students saw themselves as being equipped for clarifying subject content, searching for data, and setting up important talk forums; activities that were formally only pertinent to teachers. The authors also realized that they possessed the capacity to explain a topic to a fellow student [28]. Students felt independent; this correlated with the examination made in [29]. It was concluded that reciprocal peer tutoring was indeed very effective in a school setting.

3.4 Internet-Based Peer Tutoring

Computer-aided mentoring is one important but scarcely documented companion mentoring methodology. Researchers have featured the beneficial outcomes of pupil-to-pupil interaction on pupil motivation, learning and diligence in courses and educational modules [30]. On the other hand, computer-aided peer mentoring is still rarely documented. However, this method has the potential to acquaint expansion in distance, web and mixed courses [10].

In a research conducted by Evans and Moore [8], computer-aided mentoring was explored and applied by developing an electronic peer coaching framework known as Online Peer-Assisted Learning (OPAL). Figure 1 shows the process flow of the online peer tutoring platform. The first process in OPAL begins with answering a question. Once a student answers a question or problem correctly, he or she is granted access into "pool" of tutors. Once in, the student can post a "tutoring ticket" anonymously to the platforms database, indicating his or her accessibility and readiness to teach the question or problem for which he or she is eligible. This provides tutees with a pool of eligible and expert tutors to select from. A tutoring ticket contains records of the tutors instructing history, and length of previous tutoring sessions. A unique inclusion in the platform is that of virtual interaction. The mentoring session itself may occur over the web by means of skype, email or other social engines. The tutor and the tutee are also admonished to make video reflections of the tutoring sessions as a form of verification that the session took place. The process formally ends when the tutee answers the proposed question and is granted access to the tutor pool. Student gains were measured using a survey in which students were asked to utilize a 5-point Likert scale to rate their leaning increases due to the tutoring sessions received [31]. The authors further reckoned that it was inconclusive to rely on students' general perceptions only. The authors were able to mitigate student dissatisfaction by ensuring proper hierarchy and organization of topics and using a "gate structure" which helped to rule the possibility of having incompetent tutors. The survey also suggested a few key factors that contributed to the learning gains of students. The coaching process gave them the confidence to

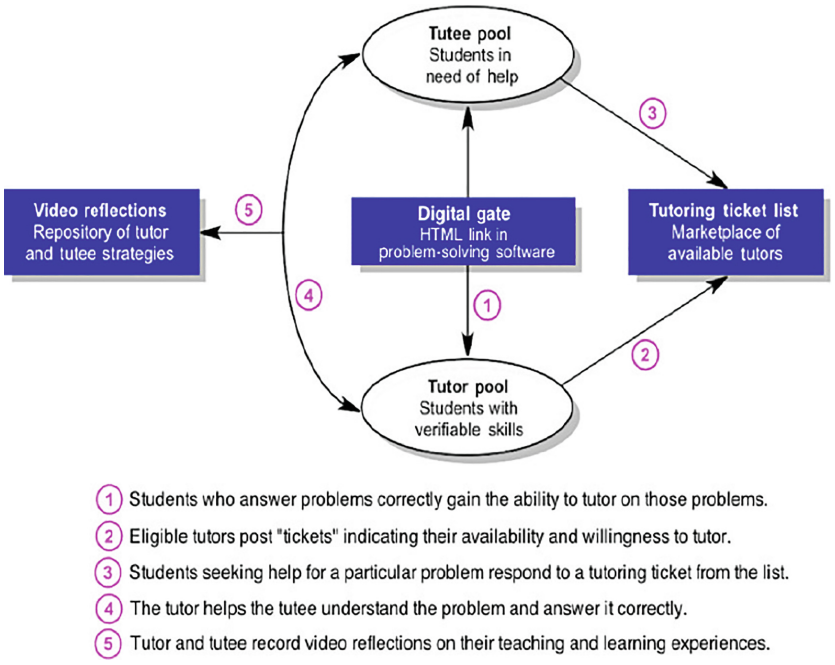

Fig. 1. Process flow of the online peer tutoring platform [8]

attempt problems that they previously feared. The platform also helped students expand their knowledge base. The videos made by the students during the session enabled students to express their thoughts and make corrections to the teaching methods.

4 Proposed Web Framework for Online Peer Tutoring

The peer tutoring web application identifies two key target users: the tutor and the tutee. The tutors help teach other students; they are responsible for accepting requests from tutees and in turn holding tutoring sessions for the tutees. They also have the responsibility of uploading important documents to the platform which are accessible to tutees. On the other hand, the tutees search for the tutors with prowess in their course of need and make a request for a tutoring session. They also have access to the materials uploaded by the tutors.

The proposed web architecture shown in Fig. 2 is hinged on sever-side programming. The peer tutoring web application is designed in such a way that the web browser communicates with the web server by making Hyper Text Transfer Protocol (HTTP) request to the server. The proposed framework consists of the client-side and the server-side which are connected by the web browser. The client side consists of the web pages seen on the browser after the requested has been sent to the server. The requests usually consist of a Uniform Resource

Locator (URL) which contains a method that defines the required action. Semantic User Interface (UI) provided the framework for the front-end design of the web application to ensure lighter web pages. The front end (client-side) and the back end (Server-side) of the web application are linked via a server-side programming language such as C#. Figure 2 depicts the communication between the client and the server in server-side programming. The Cascade Style Sheet (CSS) is usually on the web, as in the case of the peer tutorial web application which uses semantic UI for all its styling. Programming languages that can be used for the client side include HTML, JavaScript, and CSS while the languages used for the server-side include PHP, Python, C# and NodeJS.

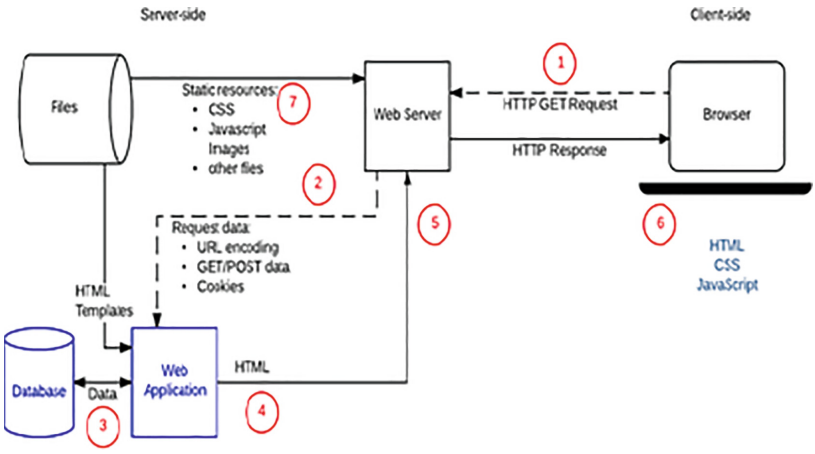

Fig. 2. Proposed web framework

Figure 3 shows the process flow of the peer tutorial web application. The login and register platform for each of the pages can be designed using semantic UI. Structured Query Language (SQL) authentication can be used for login authentication. The SQL authentication works by comparing the username and password typed by the user on the front-end with the data stored in the database. If they both matches, the user is granted access to the platform. If they do not match, however, an error message is displayed on the page. The Admin section is the first and most important section of the peer tutorial application. The administrator performs four major functions: (a) adding programs to the database; (b) adding courses to the Database; (c) editing a tutor or tutees details; and (d) granting permission for the tutee to view an uploaded material.

Semantic UI provided the forms and styles for the webpage, the front end was connected to the database using connection strings. The first step was to acquire the connection string after the creation of the necessary tables for the databases, this was followed by initializing the connection string, and running the query, function or method (this was initialized in the code on the server-side). Lastly, the connection was closed and catch was placed to detect errors

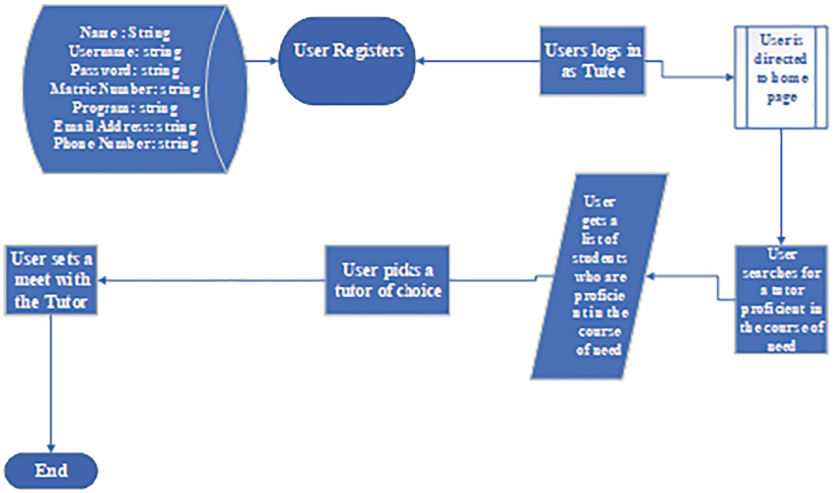

Fig. 3. Proposed web framework

if any. The tutor page consists of five tabs; Requests tab which displays all the requests that have been made by tutees, Materials tab which allows the tutor to upload documents for the tutee to view, the Profile tab which allows the tutor edit his personal details, the prowess page which allows the tutor update his course proficiency and the logout tab, which redirects the Tutor to the login page. Each entry on the front-end is stored directly in the database, through the use of the connection strings.

The tutee page consists of four tabs: Profile tab which allows the tutee update details; History tab which displayed the list of requests approved by a tutor; the Search tab which enables the tutee search for a tutor proficient in a course of need or a material uploaded by a tutor which might be helpful for that course; and the Logout tab which redirects the tutee to the login page.

5 Conclusion

In this paper, various peer tutoring forms and techniques have been explained with emphasis on the importance and success of each method of peer tutoring implemented in the literature. It became obvious that computer-aided peer tutoring is one method of peer tutoring that is scarcely documented. However, computer-aided peer tutoring framework holds unique techniques that would go a long way in improving students' academic performance.

In the light of the above, a web framework was proposed for online peer tutoring application in a smart campus. The peer tutoring web application identifies two key target users: the tutor and the tutee. The tutors help teach other students; they are responsible for accepting requests from tutees and in turn holding tutoring sessions for the tutees. They also have the responsibility of

uploading important documents to the platform which are accessible to tutees. On the other hand, the tutees search for the tutors with prowess in their course of need and make a request for a tutoring session. They also have access to the materials uploaded by the tutors.

The peer tutoring web application is designed for smart campus in such a way that the web browser communicates with the web server by making HTTP request to the server. The proposed framework consists of the client-side and the server-side which are connected by the web browser. The client side consists of the web pages seen on the browser after the requested has been sent to the server. The requests usually consist of a URL which contains a method that defines the required action.

Acknowledgement. This work was carried out under the IoT-Enabled Smart and Connected Communities (*SmartCU*) research cluster of the Department of Electrical and Information Engineering, Covenant University, Ota, Nigeria. The research was fully sponsored by Covenant University Centre for Research, Innovation and Development (CUCRID), Covenant University, Ota, Nigeria.

References

1. Plotnick, E.: Trends in Educational Technology. ERIC Digest (1996)
2. Sideridis, G.D., et al.: Classwide peer tutoring: effects on the spelling performance and social interactions of students with mild disabilities and their typical peers in an integrated instructional setting. J. Behav. Educ. **7**(4), 435–462 (1997)
3. Topping, K.J.: Trends in peer learning. Educ. Psychol. **25**(6), 631–645 (2005)
4. Dineen, J.P., Clark, H.B., Risley, T.R.: Peer tutoring among elementary students: educational benefits to the tutor 1. J. Appl. Behav. Anal. **10**(2), 231–238 (1977)
5. Harris, V.W., Sherman, J.A.: Effects of peer tutoring and consequences on the math performance of elementary classroom students 1. J. Appl. Behav. Anal. **6**(4), 587–597 (1973)
6. Miller, D., Topping, K., Thurston, A.: Peer tutoring in reading: the effects of role and organization on two dimensions of self-esteem. Br. J. Educ. Psychol. **80**(3), 417–433 (2010)
7. Pigott, H.E., Fantuzzo, J.W., Clement, P.W.: The effects of reciprocal peer tutoring and group contingencies on the academic performance of elementary school children. J. Appl. Behav. Anal. **19**(1), 93–98 (1986)
8. Evans, M.J., Moore, J.S.: Peer tutoring with the aid of the Internet. Br. J. Educ. Technol. **44**(1), 144–155 (2013)
9. Miravet, L.M., Ciges, A.S., García, O.M.: An experience of reciprocal peer tutoring at the university. Procedia-Soc. Behav. Sci. **116**, 2809–2812 (2014)
10. Olmscheid, C.: The effectiveness of peer tutoring in the elementary grades (1999)
11. Gyanani, T., Pahuja, P.: Effects of peer tutoring on abilities and achievement. Contemp. Educ. Psychol. **20**(4), 469–475 (1995)
12. Topping, K.: Tutoring. International Academy of Education Genf, Switzerland (2000)
13. Alegre Ansuategui, F.J., Moliner Miravet, L.: Emotional and cognitive effects of peer tutoring among secondary school mathematics students. Int. J. Math. Educ. Sci. Technol. **48**(8) 1185–1205 (2017)

14. Topping, K.J.: The effectiveness of peer tutoring in further and higher education: a typology and review of the literature. High. Educ. **32**(3), 321–345 (1996)
15. Hall, R.V., et al.: The importance of opportunity to respond in children's academic success. In: Mentally Handicapped Children: Education and Training, pp. 107–140 (1982)
16. Elliott, M., Delquadri, J.C.: Rearranging the Instructional Format to Increase Opportunity to Respond in the Basal Reading Series with Minority Children (1981)
17. Delquadri, J., et al.: Classwide peer tutoring. Except. Child. **52**(6), 535–542 (1986)
18. Kamps, D.M., et al.: Classwide peer tutoring: an integration strategy to improve reading skills and promote peer interactions among students with autism and general education peers. J. Appl. Behav. Anal. **27**(1), 49–61 (1994)
19. Dufrene, B.A., et al.: Monitoring implementation of reciprocal peer tutoring: identifying and intervening with students who do not maintain accurate implementation. Sch. Psychol. Rev. **34**(1), 74–87 (2005)
20. Robinson, D.R., Schofield, J.W., Steers-Wentzell, K.L.: Peer and cross-age tutoring in math: outcomes and their design implications. Educ. Psychol. Rev. **17**(4), 327–362 (2005)
21. Mitchell, R.J., et al.: Effects of fourth and second graders' cross-age tutoring on students' spelling. Reading Psychol. **37**(1), 147–166 (2016)
22. Stenhoff, D.M., Lignugaris/Kraft, B.: A review of the effects of peer tutoring on students with mild disabilities in secondary settings. Except. Child. **74**(1), 8–30 (2007)
23. Greene, I., Mc Tiernan, A., Holloway, J.: Cross-age peer tutoring and fluency-based instruction to achieve fluency with mathematics computation skills: a randomized controlled trial. J. Behav. Educ. **27**(2), 145–171 (2018)
24. Hawkins, R.O., et al.: Applying a randomized interdependent group contingency component to classwide peer tutoring for multiplication fact fluency. J. Behav. Educ. **18**(4), 300 (2009)
25. Gallagher, E.: Improving a mathematical key skill using precision teaching. Irish Educ. Stud. **25**(3), 303–319 (2006)
26. Lázaro, A.M.: La conducta prosocial. Cuadernos de trabajo social (9) 125 (1996)
27. Gómez, A., Jose, M.: La investigación educativa: claves teóricas (2007)
28. Dávila, L., Adamelia, S.: La tutoría como programa que favorece la formación integral. Presencia Universitaria **5**(10), 48–55 (2015)
29. Schleyer, G., Langdon, G., James, S.: Peer tutoring in conceptual design. Eur. J. Eng. Educ. **30**(2), 245–254 (2005)
30. Johnson, D.W.: Student-student interaction: the neglected variable in education. Educ. Res. **10**(1), 5–10 (1981)
31. Seymour, E., et al.: Creating a better mousetrap: on-line student assessment of their learning gains. In: National Meeting of the American Chemical Society (2000)