

A Telemedicine System Using Petri Nets

Iván Ruiz[1(✉)], C. A. Collazos[1], Fredy A. Sanz[1], José García[2], Emiro De-la-Hoz-Franco[3], Farid Meléndez-Pertuz[3], and César Mora[4]

[1] Vicerrectoría de Investigaciones, Universidad Manuela Beltrán, Bogotá, Colombia
ivanruizhidalgo@gmail.com
[2] Programa de Ingeniería Mecánica, Universidad del Valle, Cali, Colombia
[3] Departamento de Ciencias de la Computación y Electrónica, Universidad de la Costa, Barranquilla, Colombia
[4] Centro de Investigación en Ciencia Aplicada y Tecnología Avanzada del Instituto Politécnico Nacional, México DF, Mexico

Abstract. Several technologies in electronics and informatics have been merged into medicine field. It is commonly called telemedicine. Specifically, this work proposes to scenario and an environment which a specific protocol of physical rehabilitation process can be executed and applied to a patient by a healthcare specialist who are geographically distant one another. In this sense, a Service Oriented Architecture (SOA) was designed and analyzed, trying to ensure the right communication process. Colored Petri Nets was used as a formal modelling tool. Finally, a brief mathematical approach is shown aiming to validate the architecture specifications.

Keywords: SOA · Telemedicine · Physical rehab · Petri nets · Mathematical approach

1 Introduction

The health care system and the way they are being provided are involved in several changes according to the constants technology advances [1]. The inclusion of the electronic and information technologies into health care system is commonly called telemedicine. It is possible to ensure that the evolution of mobile communications and the integration of information and communication technologies within the field of health have great potential to offer patients convincing alternatives as a replacement for conventional medical care through synchronous interaction with devices of medical assistance [2].

This scenario, which makes possible to provide timely attention to patients in a dispersed geographic location, offers, among other advantages: decentralization of rehabilitation centers, increased coverage and prevention of infection. Based on the information presented above, it can be affirmed that telemedicine is an effective way to assure an adequate health care service [3].

In developing countries, using telemedicine may be an effective way to assure the right to health care service that must be provided by government [4]. With this aim, several countries as Colombia, has begun to incorporate many electronic and

© Springer Nature Switzerland AG 2019
S. Misra et al. (Eds.): ICCSA 2019, LNCS 11620, pp. 758–766, 2019.
https://doi.org/10.1007/978-3-030-24296-1_60

information technologies into health care system. For example, authors like [5], the development of a platform to support low-income and geographically isolated hospitals located in the department of Valle del Cauca (Colombia) is presented. This platform is mainly tele-education (in physical rehabilitation). The platform developed in this project, aims to filter the consultations to determine if the patient needs to move to a specialized medical center.

Lozano and Romero [4] carried out a study in the Universidad Nacional de Colombia, focused on providing telemedicine service in radiology (Tele-radiology) is presented. The objective of this architecture is to facilitate to upload information in images of the X-rays of patients so that later they can be analyzed by radiologists. In other studies as [6] deals with the problem of telemedicine applied to psychiatric consultations, which is a work developed by the Universidad CES de Medellín (Colombia). In this work, what the authors propose is a structuring of a teleconsultation protocol for patients with problems framed in psychiatry. For this purpose, a web application through which the services of diagnosis and control of patients were developed.

In other countries, telemedicine is already working. Countries such as Mongolia, telemedicine has been carried out focused on neonatal care in rural regions of that country. In total, 598 patients were treated between 2007 and 2009, of which only 36 were referred to a health center in a main city [7]. This shows that telemedicine is an effective tool to avoid trips to health centers, which could put the integrity and health of the patient at risk.

Woong and Cheol [8] understand telemedicine as an effective tool to prevent and diagnose diseases on time by continuously monitoring the vital signs of the patient. In this sense, Bradley *et al.* [9, 10] presents a device called NeXOS, which help the physiotherapist in the rehabilitation process in patients with physical injuries. Additionally, it has a system capable of connecting to the internet to interact with another specialist (who is geographically distant) in the process of patient rehabilitation. It should be noted that this work does not have an architecture with orientation to services and neither a modeling of it.

Another example of the telemedicine service is the one shown by Ferriol *et al.* [11] where the development of a virtual rehabilitation platform is presented, aimed at elderly people (3rd age) with knee replacement, which is a very frequent surgery in this population. The platform has dynamic material in the form of text, images or video in order to support the rehabilitation process. It also performs a monitoring of the movements of the person with the use of sensors that are able to capture the movements of the patient. Later these data are transmitted to a specialist to be analyzed.

Finally, telemedicine and telehealth are two concepts widely studied because there are many medical specialties. As mentioned, telemedicine has been applied in several areas such as cardiology, pediatrics, radiology, psychiatry, neonatal care and physiotherapy. Hence, this work is focused on making use of information technologies and adapting them to physiotherapy and thus be able to provide the tele-physiotherapy service. To assure an adequate system behavior, a modeling in Petri Nets was developed and studied for both the definitions of the services and the communication among them.

2 Definitions

2.1 Service Oriented Architecture (SOA)

An architecture SOA establish a list of guidelines to design the interaction among independent applications to be access to form internet to its functions which are offered like services. It is a common way to implement an SOA using Web Service technology [12].

There are several principles that an SOA architecture could have. Some principles are given by [13], and they are: reusability, interoperability, auto-content, scalability, modularity, easy to discover and others. From this point of view, SOA allows the creation of services and applications which can exist and be consumed by several users and other applications through network [12].

2.2 Petri Net

A Petri Net (PN) can be defined as a matrix given by $PN = \{P, T, A, M\}$. Next is presented the principal components of a Petri Net [14, 15]:

- Places (P): represented by circumferences and denoted by $P = \{P_1, P_2, P_3, ..., P_n\}$, where $n \geq 0$ is a positive integer.
- Transitions (T): represents by rectangles or vertical lines (see Figs. 1 and 4) and denoted by $T = \{T_1, T_2, T_3..., T_m\}$, where $m \geq 0$ is a positive integer.
- Directed arc (A): represented by arrows. It defines the inputs and outputs from transition to places and vice versa.
- Marks (M): also called as "token", is represented by points in the places; the transitions consume marks from an input and generate marks to output places. M_0 is a vector which contains all tokens at initial system state.

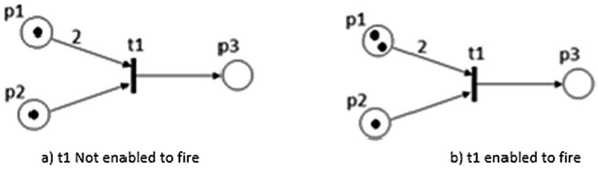

Fig. 1. Petri net: firing condition [15]

A transition is enabled if each inlet has as minimum one quantity of marks equally to the arc weight than has associated, past is shown outlined next:

3 General Architecture Proposal

In Fig. 2 is presented the general architecture to allow the attention and therapy process from a Specialist doctor to a patient located in an isolated hospital.

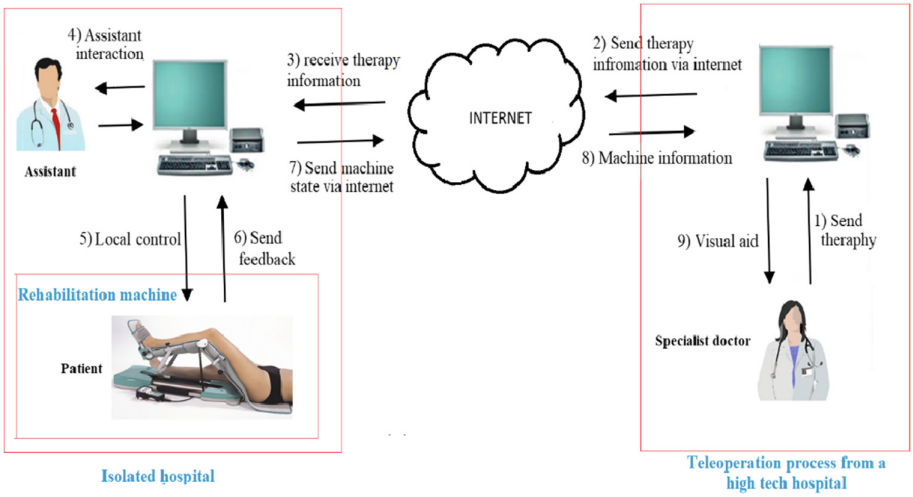

Fig. 2. Proposed architecture for the tele-physiotherapy service

The therapy and attention process have several steps described by Fig. 2. The general process is: a specialist doctor (located in a high-tech hospital) send a therapy process through internet, the information is received by an assistant and a patient (located in an isolated hospital) where the therapy process is executed.

Next, a feedback is sent to the Specialist with the aim to monitor the entire process. Here, it is important to note three persons involved in the process: Specialist Doctor, Assistant and Patient. On the other hand, there are three general process to provide the tele-physiotherapy process (based on [15]):

- *Teleoperation Service:* this service set the telecommands instructions and the Specialist have his feedback
- *Isolated Hospital Service*: Receive the telecommands, also send the feedback information to the specialist and assistant.
- *Physical Rehabilitation Machine Service*: It executes the therapy and have a direct interaction with the patient.

All this persons and process are involved into the tele-physiotherapy process. The operations involved in the process is shown in Fig. 3.

Figure 3 shows the general functions that must be carried out in two hospitals where the therapy process take place: Isolated Hospital and High-Tech Hospital. This allows that the doctor can perform a physical rehabilitation session for a geographically distant patient.

It is important to clarify that the Isolated Hospital must generate a continuous feedback in form of an "echo" to the High-Tech Hospital aiming to continuously inform the current state of the therapy. However, this detail of modelling specification was not taking into account in the present study.

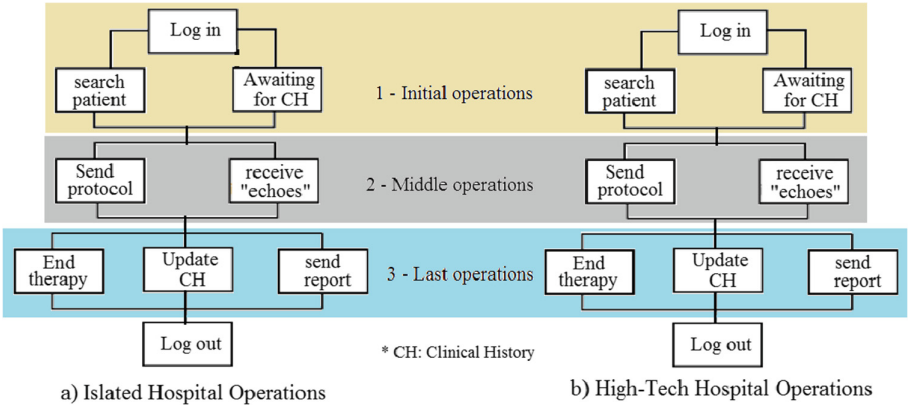

Fig. 3. Proposed architecture for the tele-physiotherapy service

4 Model in Colored Petri Nets

In order to model the general architecture proposed on Fig. 2, an extension of the ordinary Petri Nets was used. This extension is named Colored Petri Nets (CPN) and CPNtools 4.0 was used to model the system dynamics. The tele-physiotherapy service be seen in Fig. 4.

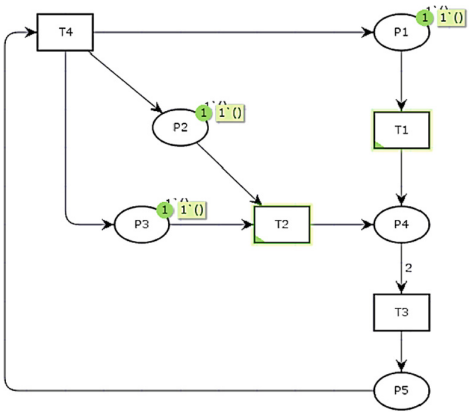

Fig. 4. Tele-physiotherapy service net

The places and the transitions in Fig. 4, are described in Table 1.

Nevertheless, Fig. 4 shows only one tele-physiotherapy service. Given that a service orientation is being used, all services can be called as many times as needed. Thus, the general architecture is showed in Fig. 5:

Table 1. Transitions and places definitions

Place		Transition	
P_1	Doctor available	T_1	Teleoperation Service process
P_2	Patient ready	T_2	Isolated Hospital Service process
P_3	Assistant available	T_3	Physical rehabilitation machine service
P_4	Information through internet	T_4	Save data and set as available the doctor, patient and assistant
P_5	Therapy concluded		

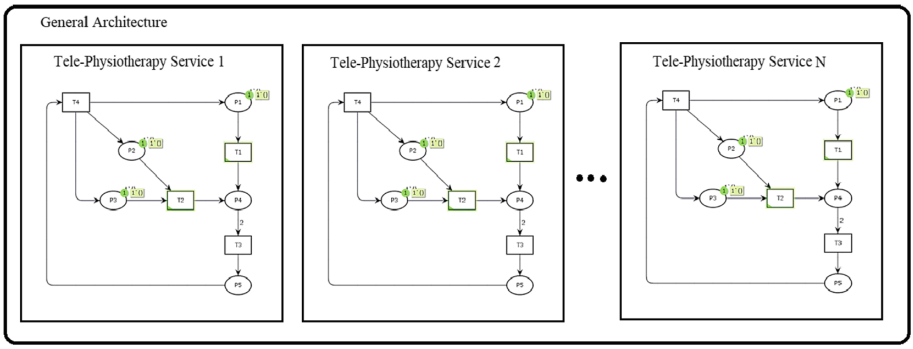

Fig. 5. General architecture

Given the information for both the Fig. 4 and Table 1, an incidence matrix is expressed as follows [14]:

$$a_{ij} = a_{ij}^{+} - a_{ij}^{-} \tag{1}$$

Where, a_{ij}^{+} is the post-incidence matrix and a_{ij}^{-} is the pre-incidence matrix. The difference among both matrices is that a_{ij}^{+} specified the weight of the arcs directed from the transition to places and a_{ij}^{-} from the places to transitions. In this way, we can write those matrices as follows:

$$a_{ij}^{+} = \begin{pmatrix} 0 & 0 & 0 & 1 \\ 0 & 0 & 0 & 1 \\ 0 & 0 & 0 & 1 \\ 1 & 1 & 0 & 0 \\ 0 & 0 & 1 & 0 \end{pmatrix} \text{ and } a_{ij}^{-} = \begin{pmatrix} 1 & 0 & 0 & 0 \\ 0 & 1 & 0 & 0 \\ 0 & 1 & 0 & 0 \\ 0 & 0 & 2 & 0 \\ 0 & 0 & 0 & 1 \end{pmatrix},$$

thus

$$a_{ij} = \begin{pmatrix} -1 & 0 & 0 & 1 \\ 0 & -1 & 0 & 1 \\ 0 & -1 & 0 & 1 \\ 1 & 1 & -2 & 0 \\ 0 & 0 & 1 & -1 \end{pmatrix}$$

A state for a PN shows a change in a tokens distribution as a result as a firing condition execution. The general equation that describes this performance is given by [14]:

$$M_k = M_{k-1} + A^T \mu_k;\ K = 1, 2, 3 \ldots \tag{2}$$

Where, M_k is the state to calculate, M_{k-1} is the system current state, A^T is the incidence matrix equal to a_{ij} described by Eq. 1, and μ_k is the vector which allows the marks firing through the PN to achieve the state M_k. In order to know the final state, an evaluation on Eq. (2) was done, so $M_{k-1} = M_0 = (1, 1, 1, 0, 0)$ is the initial mark and $\mu_k = (1, 1, 1, 1)$ is the all transitions fire condition to get the PN final state. The result be follows:

$$M_{final} = \begin{pmatrix} 1 \\ 1 \\ 1 \\ 0 \\ 0 \end{pmatrix} + \begin{pmatrix} -1 & 0 & 0 & 1 \\ 0 & -1 & 0 & 1 \\ 0 & -1 & 0 & 1 \\ 1 & 1 & -2 & 0 \\ 0 & 0 & 1 & -1 \end{pmatrix} \cdot \begin{pmatrix} 1 \\ 1 \\ 1 \\ 1 \end{pmatrix} = \begin{pmatrix} 1 \\ 1 \\ 1 \\ 0 \\ 0 \end{pmatrix}$$

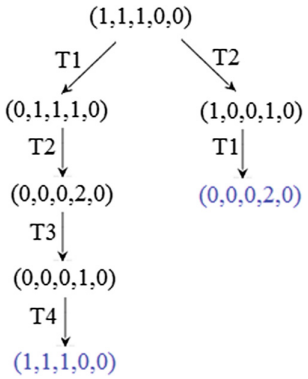

Fig. 6. Reachability tree

It is an important result because it means that the final state is equal to initial state, which is a goal in these kinds of PNs that represent a service available once it be consumed. In Fig. 6, the reachability tree is shown, based on Fig. 4.

In a Petri Net, a reachability tree consists of a finite graph in the form of a tree in which each node is an achievable mark of the network and the nodes are connected by arcs labeled with the transition that is firing to change from one marking to another. It begins form an initial marking M_0 aiming to generate all possible states through firing process.

5 Conclusion

A service orientated architecture was proposed following the guidelines of an SOA architecture for teleoperation of physiotherapy rehabilitation process. In order to assure the correct definition of the services, a modelling in Colored Petri Nets was developed. Therefore, a brief matrix analysis was done to determinate and corroborate if the initial state is equal to final state, which is an important goal in a service request.

The modeling of this architecture was made taking into account the basic principles of SOA, such as interoperability, reusability, low coupling, and self-containment, among others. All these principles are important and make the architecture become service-oriented.

In the model process (see Fig. 4), it is important to note that each transition represents each service involved. Thus, in the future, transition must be a macro-transition using hierarchies which is very important advantage from Colored Petri nets to Ordinary Petri Nets.

In further works, the technological objective of the project is to design an SOA that allows tele-operated human rehabilitation via technical aids; understanding technical aids as specialized machines of a physical rehabilitation therapy session. These technical aids must be provided with sensors (angular position, speed, strength, etc.) that allow monitoring both the state of the machine as well as the evolution of therapy. Then, the development of these machines and a complex tele-physiotherapy architecture will be studied in the future. The methodology used in this work is applicable to real processes and may be used for different fields of application [16].

References

1. Rodríguez, E.: Telesalud en Colombia. Ministerio de la proteccion social (2012). http://www.acreditacionensalud.org.co/catalogo/docs/Revista%20Normas%20y%20Calidad%20N%C2%B0%2090.pdf. Accessed 15 febrero 2013
2. Heinzelmann, P., Lugn, N., Kyedar, J.: Telemedicine in the future. J. Telemed. Telecare **11**, 384–390 (2005)
3. Kopec, A., Rodriguez, G.: Aplicaciones de telecomunicaciones en salud en la subregion Andina. Organismo Andino de Salud-Convenio Hipolito Unanue, Bogota DC (2006)
4. Lozano, A., Romero, E.: Telemedicina y telerradiología. La experiencia en la Universidad Nacional. Revista Colombiana de Radiologia, pp. 2435–2439 (2008)
5. Yunda, L., Gomez, L., Rodriguez, S., Millán, R., Tobar, M.: Plataforma Web para un nuevo modelo de tele-rehabilitación, de base comunal, en areas rurales. Revista S&T **9**(19), 55–67 (2011)

6. Londoño, N., Castaño, P., Montoya, D., Ruiz, C.: Protocolo de telemedicina para la consulta psiquiátrica. Revista Ingeniería Biomédica **3**(5), 43–49 (2009)
7. Global Observatory for eHealth: Telemedicine Opportunities and Developments in Member States. World Health Organization, Geneva (2010)
8. Woong, T., Cheol, H.: A healthcare system as a service in the context of vital signs: proposing a framework for realizing a model. Comput. Math Appl. **64**, 1324–1332 (2012)
9. Bradley, D., Acosta, C., Hawley, M., Brownsell, S., Enderby, P., Mawson, P.: NeXOS – the design, development and evaluation of a rehabilitation system for the lower limbs. Mechatronics **19**, 247–257 (2009)
10. Bradley, D., Acosta, C., Hawley, M., Brownsell, S., Enderby, P., Mawson, P.: Remote rehabilitation - the NeXOS project: lessons learnt and questions raised. In: IEEE 11th International Conference on Rehabilitation Robotics, Kyoto, Japan (2009)
11. Ferriol, P., Beatle, M., Arrivi, E., de Alarcon, P., Farreny, M.: TeleRHB: Telerehabilitación en personas mayores. XXVII CASEIB - Sociedad Española de Ingeniería Biomédica, vol. 1 (2009)
12. Microsoft Corporation, La arquitectura orientada a servicios (SOA) de Microsoft aplicada al mundo real, Estados Unidos (2006)
13. Josuttis, M.: SOA in Practice the Art of Distributed System Design. O'Reilly, Sebastopol (2007)
14. Zurawski, R., Zhou, M.: Petri nets and industrial application: a tutorial. IEEE Trans. Ind. Electron. **41**(6), 567–583 (1994)
15. Ruiz, J.G., Collazos, C.: Modeling in petri nets of a dispersed system in a physical rehab. Revista Ingeniería Biomédica **11**(21), 49–55 (2017)
16. Campuzano, J., Melendez, F., Nuñez, B., Simancas, J.: Sistema de Monitoreo Electrónico de Desplazamiento de Tubos de Extensión para Junta Expansiva. Revista Iberoamericana de Automática e Informática Industrial **14**(3), 268–278 (2017)